Curved crystals as high-reflectivity components of a Laue lens to focus the 511-keV annihilation line

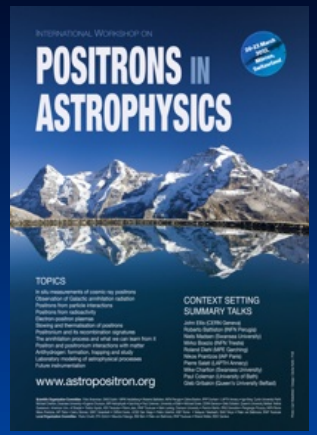

V. Guidi,
V. Bellucci, R. Camattari, I. Neri
University of Ferrara, INFN and CNR
Ferrara - Italy

Mürren, March 23, 2012

Sensor and Semiconductor Laboratory

INFN Istituto Nazionale di Fisica Nucleare

idasc Istituto di Acustica e Sensoristica "Orso Mario Corbino"

asi agenzia spaziale italiana

Outline

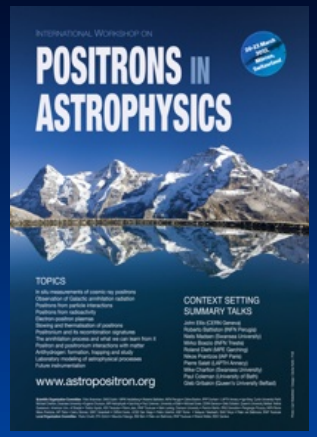

- Curved crystals and some applications
- Scientific motivations for astrophysics
- Crystals bent by surface grooving
- Experimental results
- Possible configurations of bent crystals for a Laue lens
- Discussion and conclusions

Göbel mirrors

- Curved crystals can be used as Göbel mirrors in Bragg geometry to transform a divergent x-ray beam into an intense parallel beam

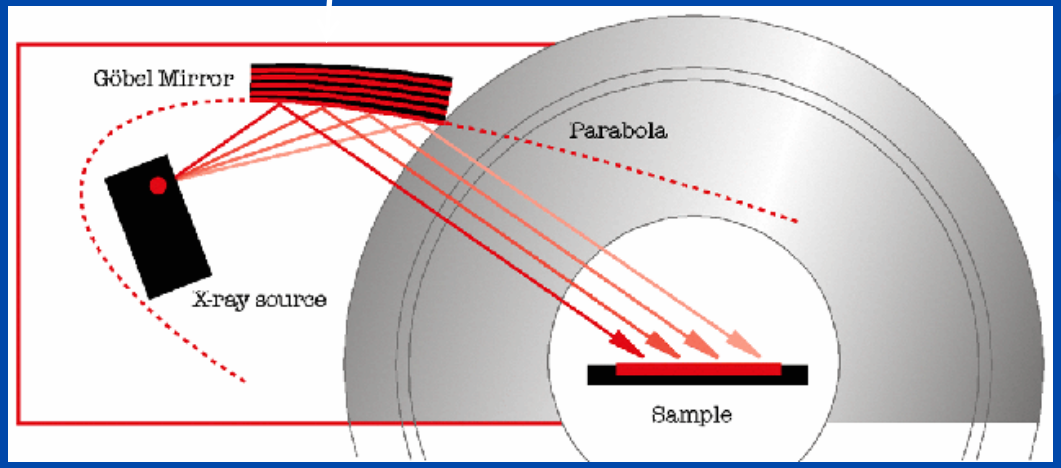

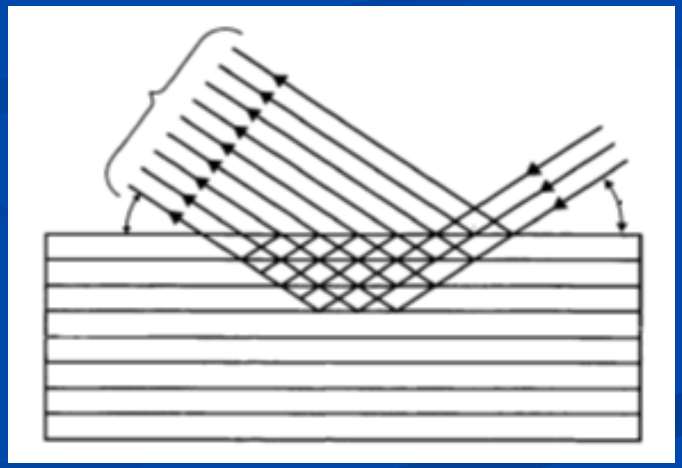

Bragg geometry

Diffraction of neutrons

- Neutron diffraction

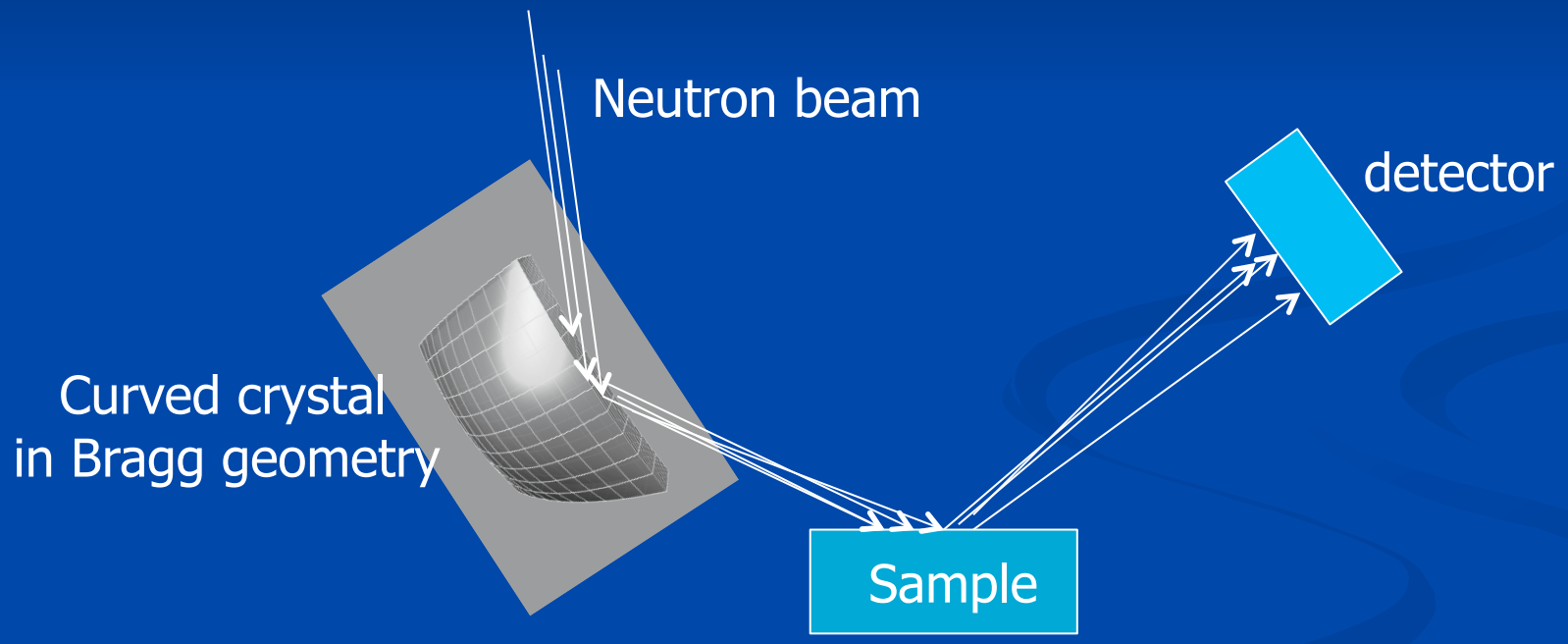

Curved crystals can be used as neutron monochromators
over a wide energy band to analyze magnetic structure of materials

Particle steering via channeling

Channeling is confinement of charged particles travelling through a crystal by atomic planes or strings (planar or axial mode)

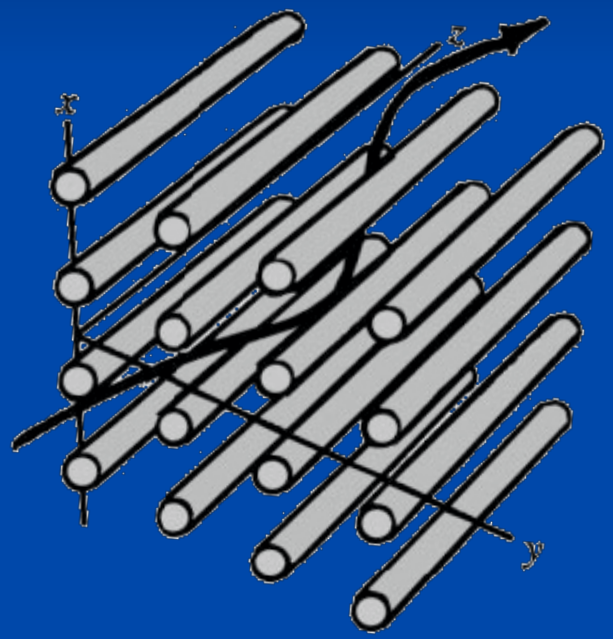

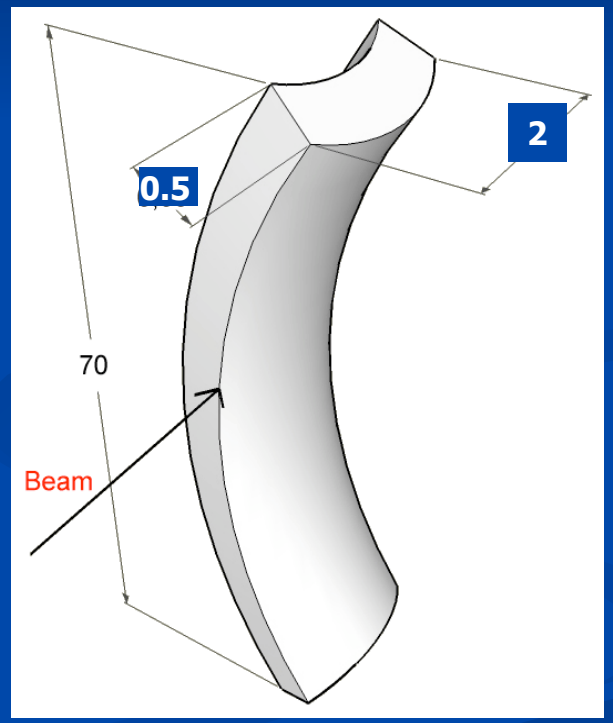

Channeled particles in a bent crystal follow the curvature of the crystal thereby they are diverted like an equivalent magnetic filed of thousands of Tesla would do!!!

The UA9 experiment at CERN

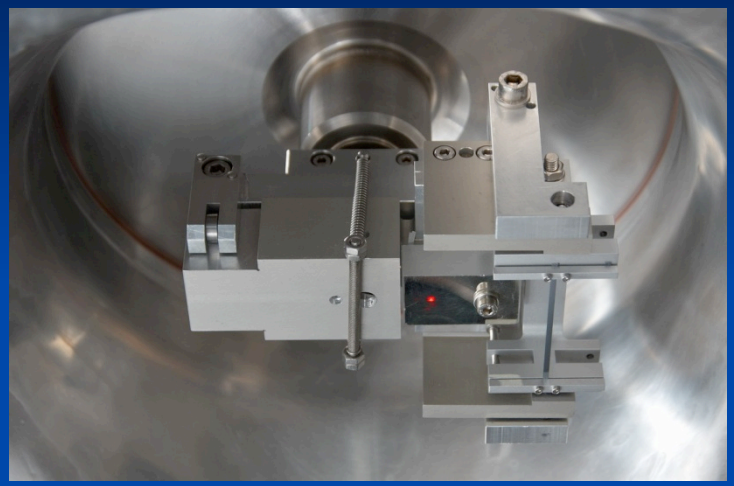

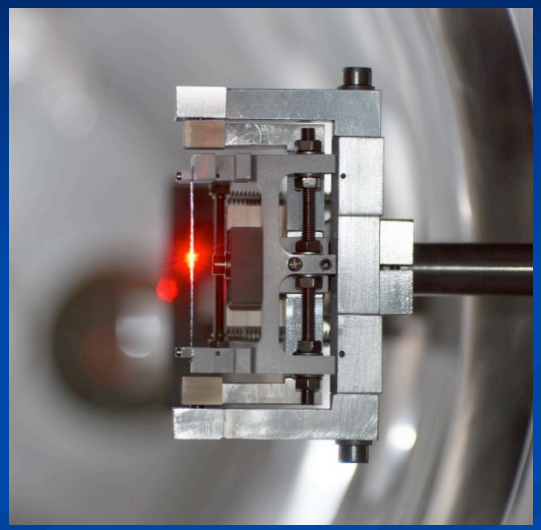

Crystals fabricated at Ferrara and experimented at SPS (CERN)

Phys Lett. B 692 (2010) 78

Laue lens

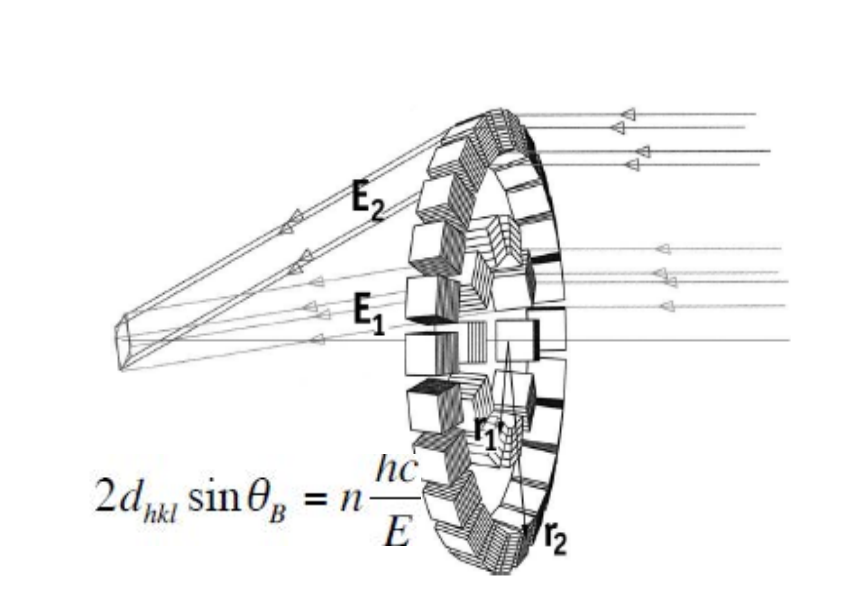

- Space-borne telescope to concentrate radiation over selected energy bands in the hard x-ray/soft γ domains.
- Crystals are arranged as concentric rings to diffract radiation in Laue geometry from celestial sources to the focus.
- Mosaic crystals are normally considered for application

Curved crystals allow focusing and concentrating high-energy x-rays at high diffraction efficiency and increasing the energy bandwidth of the lens

Curved crystals for a Laue lens

- Crystals with curved diffracting planes as an alternative to mosaic crystals in diffraction of high-energy rays in Laue geometry.
- Re-diffraction within the crystal is prevented, thus the 50%-limit is overcome.

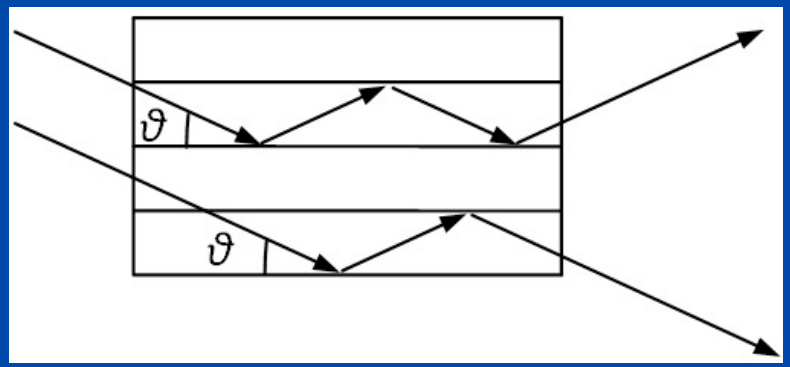

vs.

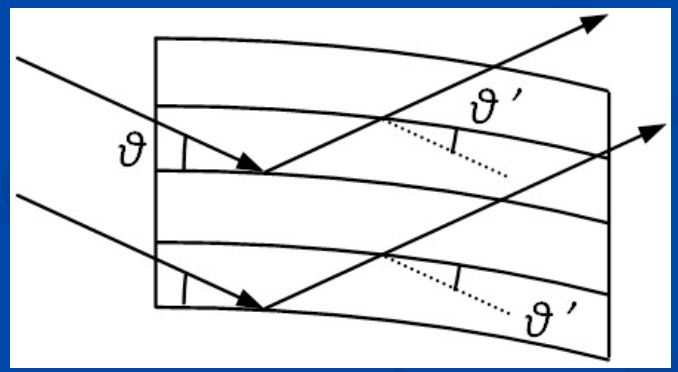

- Curved crystals offer a continuum of possible diffraction angles over a finite range, leading to a rectangular-shape energy passband directly owing to the curvature.

Scientific motivations

- Type 1A supernova

  study of the line at 847 keV emitted by the decay chain of ^{56}Ni which is largely produced during explosions.

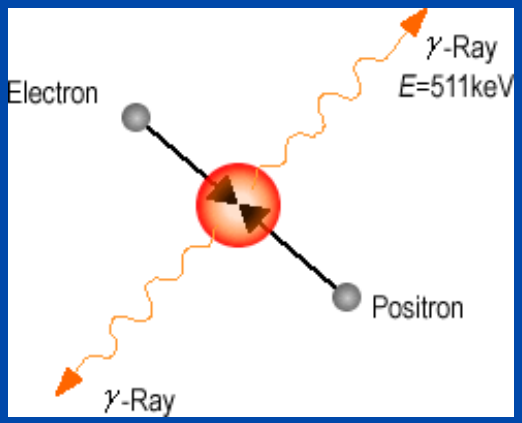

- Electron-positron annihilation line

  Sources of positrons in galactic center

  Low Mass x-ray binaries (LMXRB)?
  Dark Matter?

Imaging in nuclear medicine: SPECT

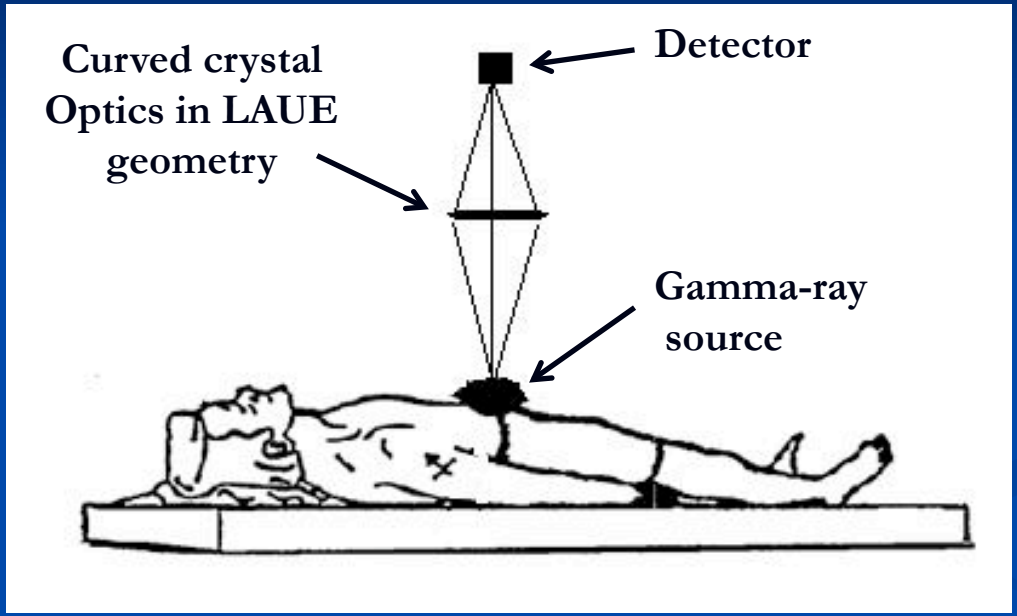

$$^{99}\mathrm{Mo} \rightarrow {}^{99m}\mathrm{Tc} + \beta^{-} + \bar{\nu}_{e}$$

Decay of ^{99m}Tc to 140 keV photons

$$^{99m}\mathrm{Tc} \rightarrow {}^{99}\mathrm{Tc} + \gamma$$

Curved crystals would improve gamma-ray detection in SPECT with better resolution and lower radioactive dose to the patient than for the standard case with a gamma-camera system.

Imaging in nuclear medicine: PET

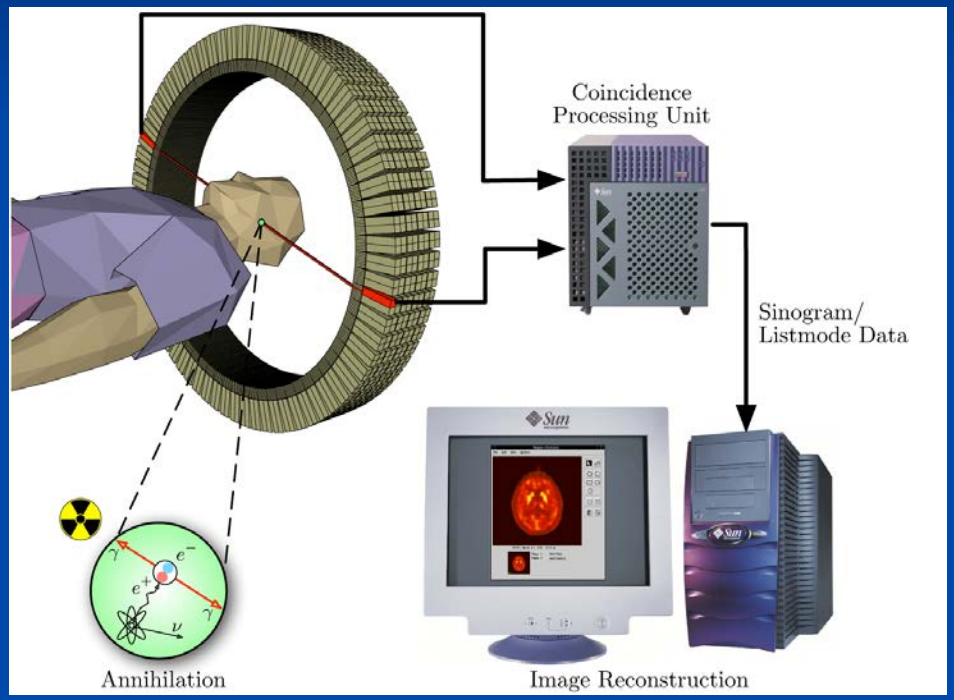

Positron Emission Tomography scheme

A Laue lens made of curved crystals would concentrate 511-keV photons due to annihilation providing higher resolution with respect to existing instruments.

It can work under either standard radial or innovative axial geometry.

Self-standing bent crystals through surface grooving

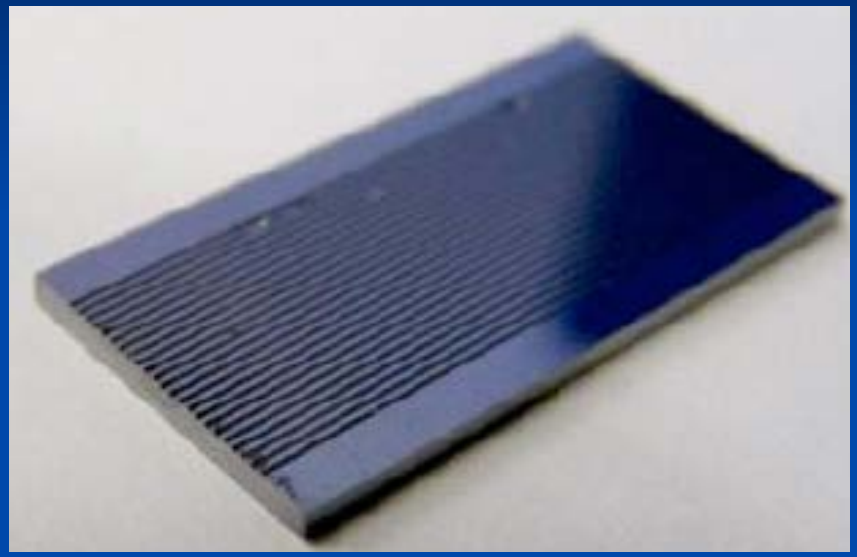

Grooved Si crystal

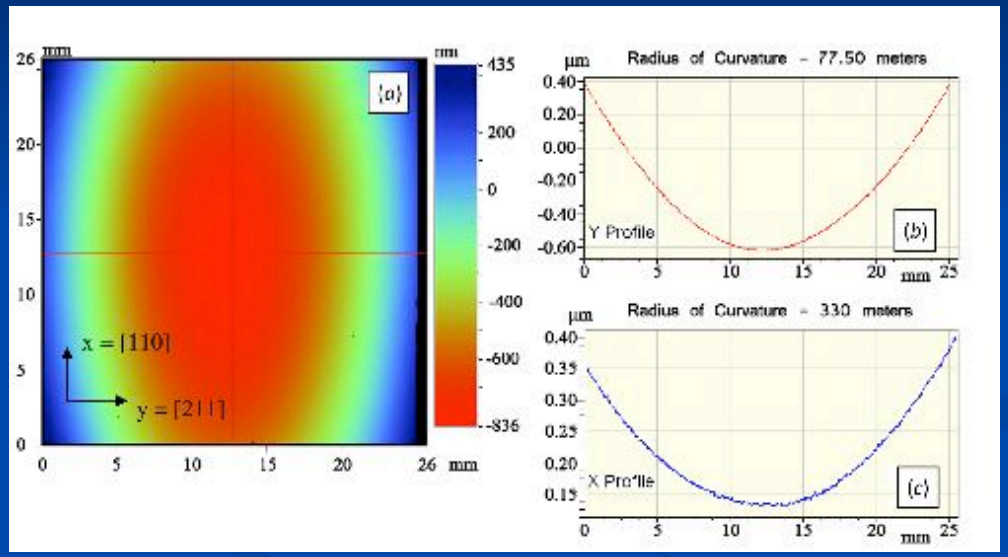

Optical profilometry of
the surface without grooves

Grooves manufactured on the surface of a crystal by a diamond saw induce a uniform and permanent curvature within the crystal with no need for external devices.

Principles and features

- Plastic compression of the material beside grooves deforms the whole crystal, leading to a net curvature within the crystal itself.
- Final curvature can be modulated by adjusting the process parameters (advance speed, blade grit, geometry of the grooved path on the sample).
- High accuracy and reproducibility.
- Separate control of the two principal curvatures.

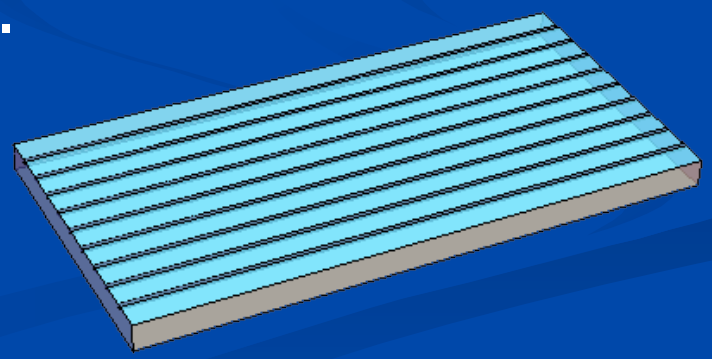

N. Barrière, V. Guidi et al J. Appl. Cryst. 43 (2010) 1519

Measurements at ESRF

- Grooved crystals were tested by x-ray diffraction of (111) planes in Laue geometry.
- Aim of the experiment was to assess the performance of such crystals

A quasi-parallel and highly monochromatic pencil beam was set at energy ranging from 150 to 700 keV. Measurement consisted in Rocking Curves.

European Synchrotron Radiation Facility (Grenoble, France)

V. Bellucci et al. Exp. Astron. 31 (2011) 45–58

Silicon samples

- Grooved sample S71 (25.5 x 1 x 10 mm^3) was measured at 150 keV, through its 10 x 1 mm^2 (a) or 25.5 x 1 mm^2 (b) surface. The pencil beam entered the sample at several depths from the grooved side.
- Measured morphological curvature was nearly 16 arcsec, thereby expected passband is 16 arcsec ((a) case).

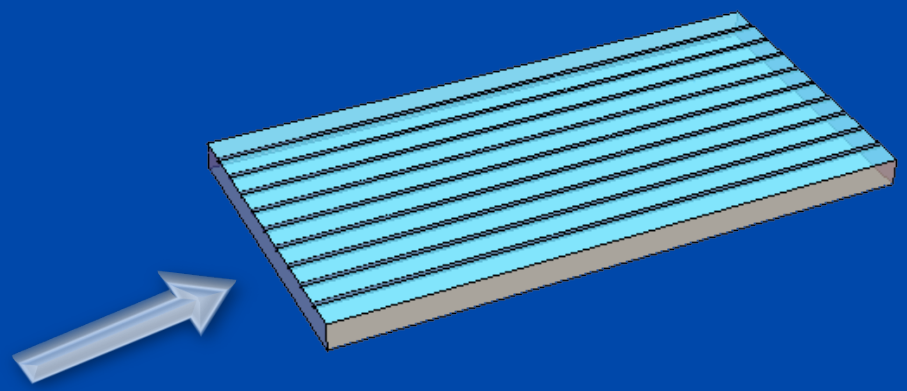

(a)
Beam quasi-parallel to the grooves

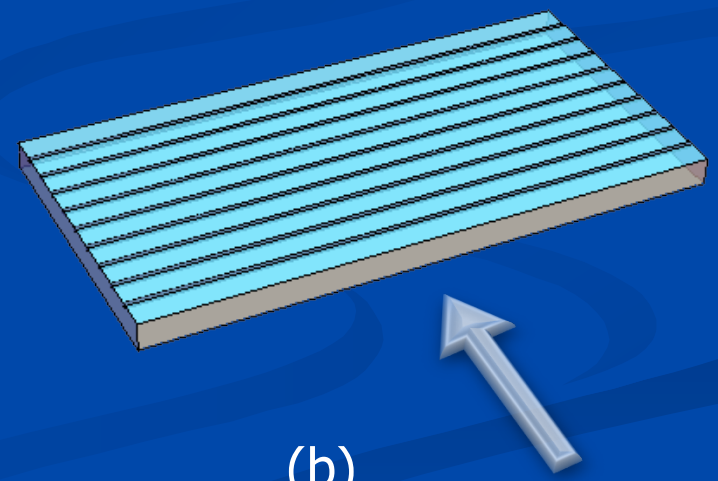

(b)
Beam perpendicular to the grooves

Rocking Curves at 150 keV

Parallel configuration

z=0.4 mm

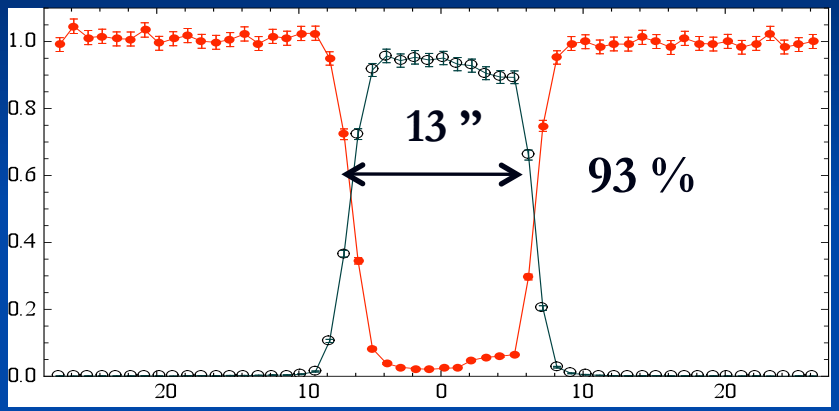

Perpendicular configuration

z=0.15 mm

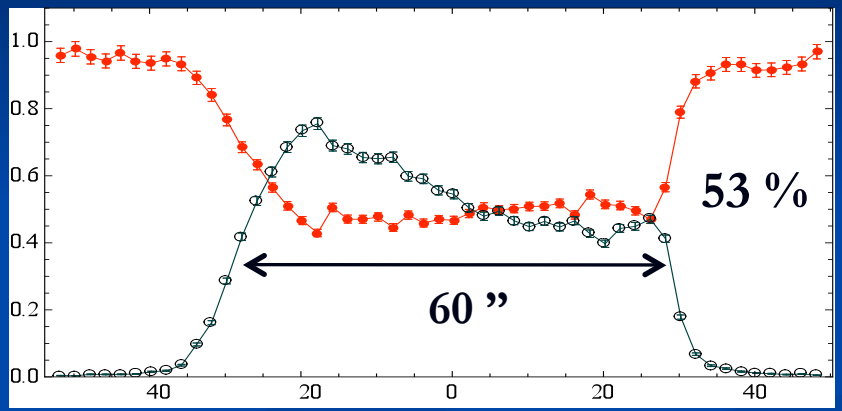

Normalized counts

Angle of incidence (arcsec)

z=0.8 mm

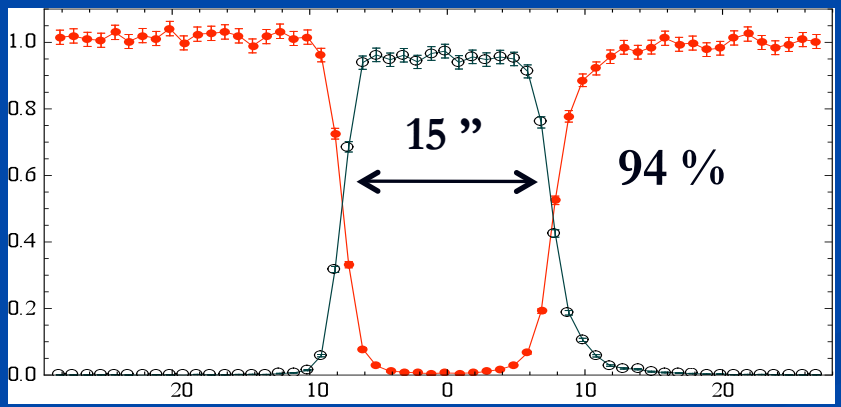

z=0.85 mm

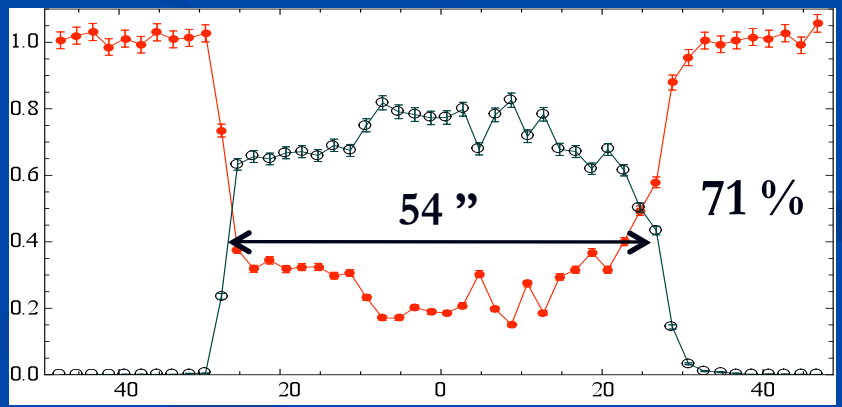

Normalized counts

Angle of incidence (arcsec)

Discussion

- All RCs exhibited rectangular and homogenous shapes with an energy passband of the order of crystal bending (about 16 arcsec for the parallel case and 57 arcsec for the perpendicular case).
- At 150 keV diffraction efficiency is significantly high in all cases and close to unity in the parallel case.
- This performance is representation that a bent crystal can overcome the 50%-efficiency limit that holds for a mosaic crystal.

Insight into the method of surface grooving

- Perpendicularly to the grooves, efficiency varies over the crystal depth, being lower than predicted especially near the grooved region.

- This fact is ascribed to fabrication process of grooves with selected parameters. Generation of mosaicity perpendicularly to the translation of the blade is easier to form than longitudinally because of the stronger action exerted by the blade on the side walls of the groove.

Efficiency vs. energy
beam parallel to the grooves

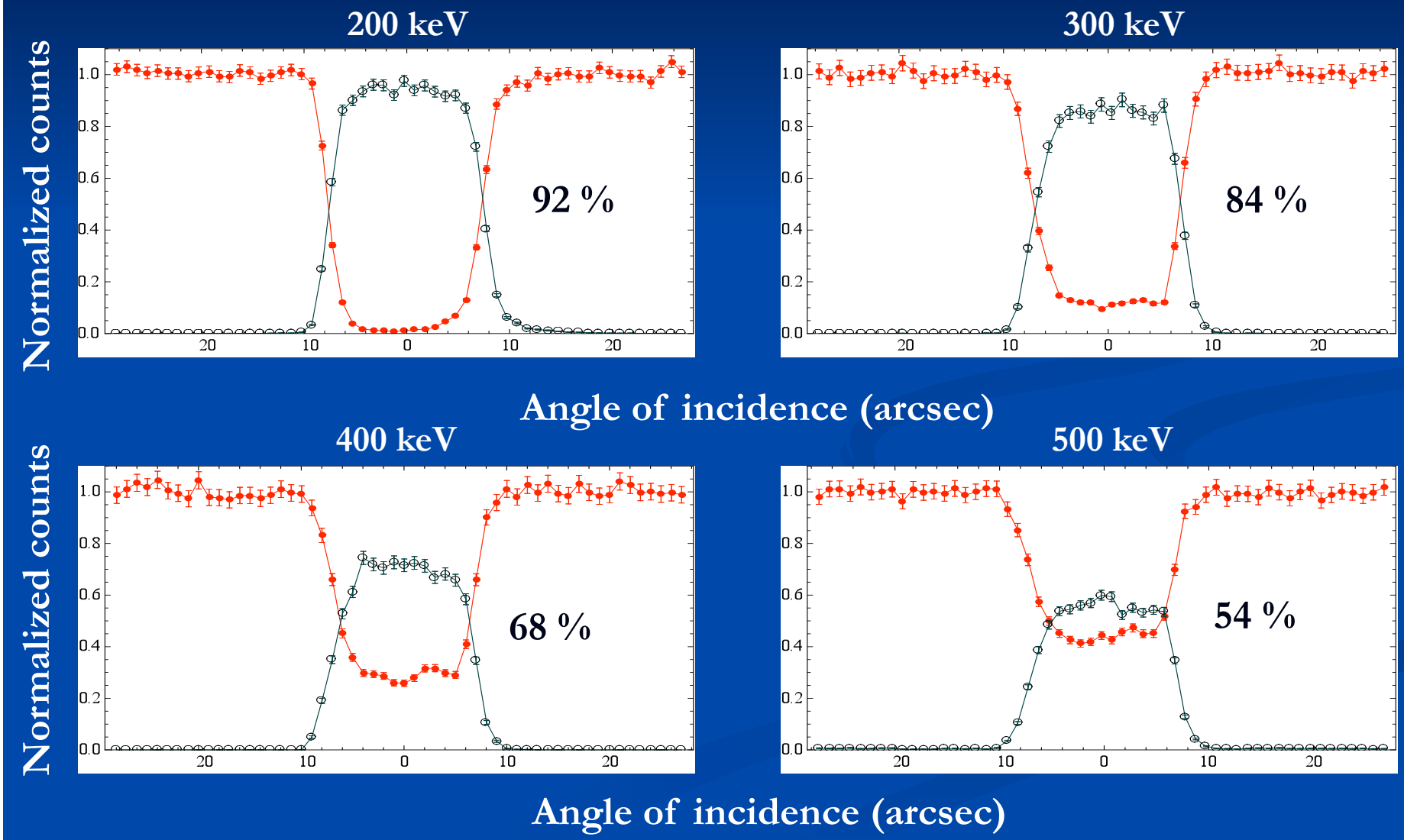

Efficiency vs. energy
beam perpendicular to the grooves

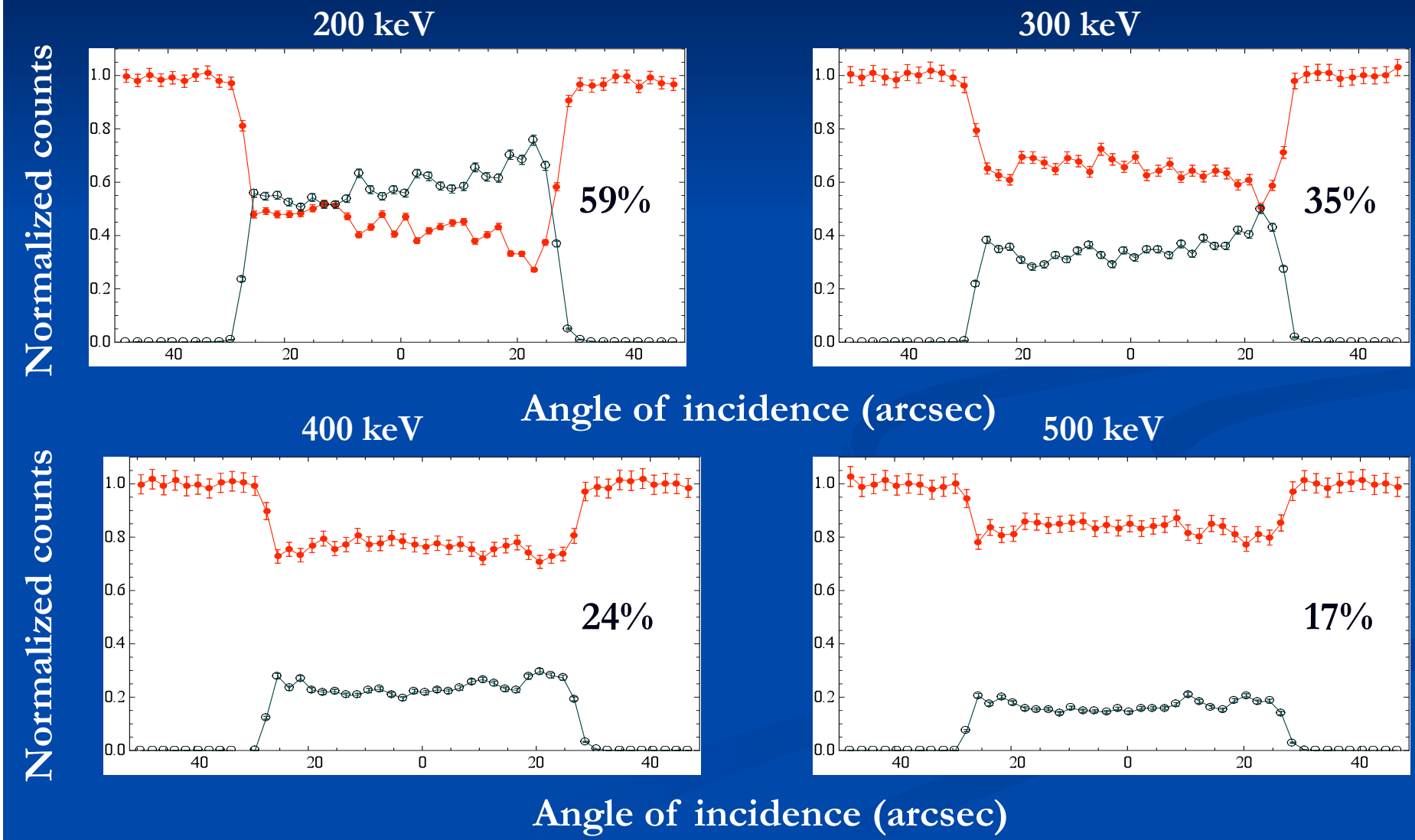

Theory vs. experiments

Parallel configuration **Perpendicular configuration**

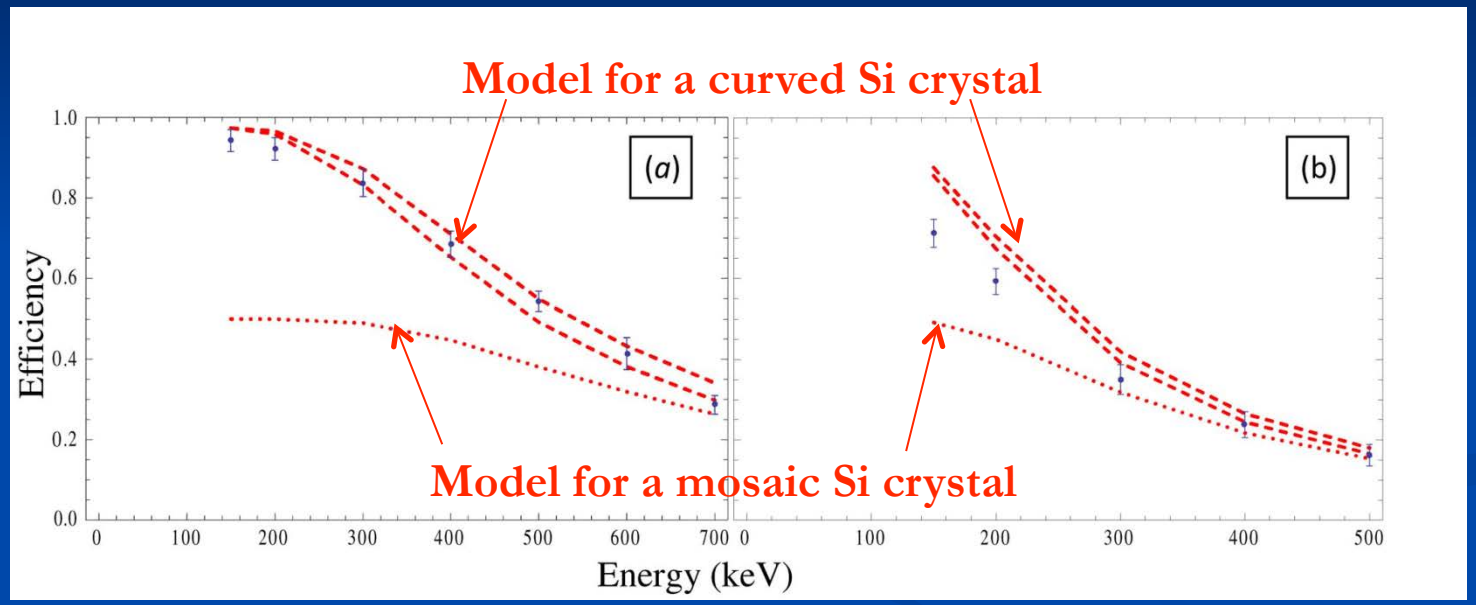

- Modelling with current theories on diffraction in a curved crystal was carried out
- Satisfactory agreement of the curves was achieved
- Proposal for a Laue lens specifically designed on the 511 keV line (see poster P20 by Mr Camattari et al.)

Samples of germanium

- Grooved sample 2_G32 (18.6 x 2 x 9.8 mm^3) was measured at 300 keV, through its 9.8 x 2 mm^2 surface. The pencil beam entered the sample at different depth (coordinate z) from the grooved side and quasi-parallel with respect to the grooves.
- Expected angular distribution was 42.4 arcsec.

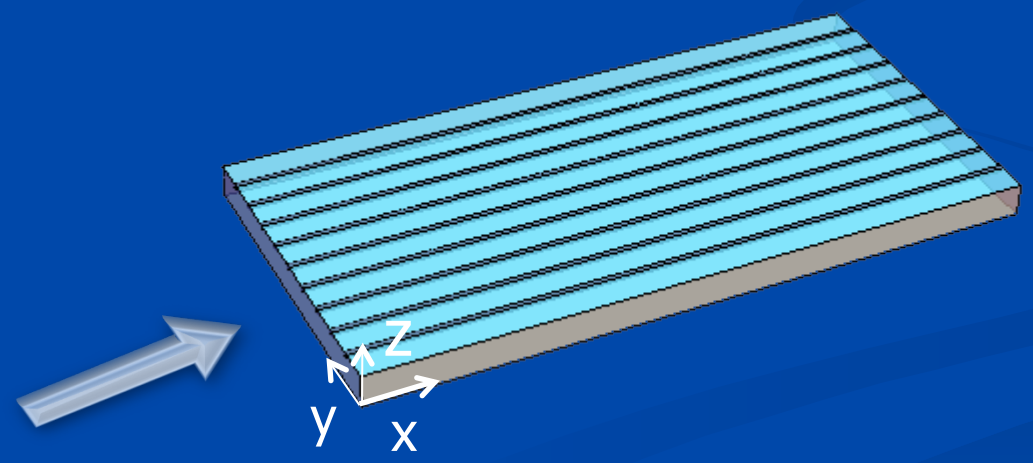

Beam quasi-parallel to the grooves

Rocking curves at 300 keV

z=0.25 mm

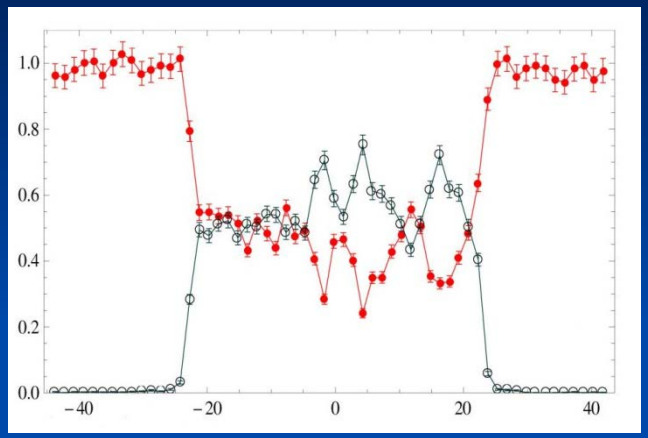

z=0.85 mm

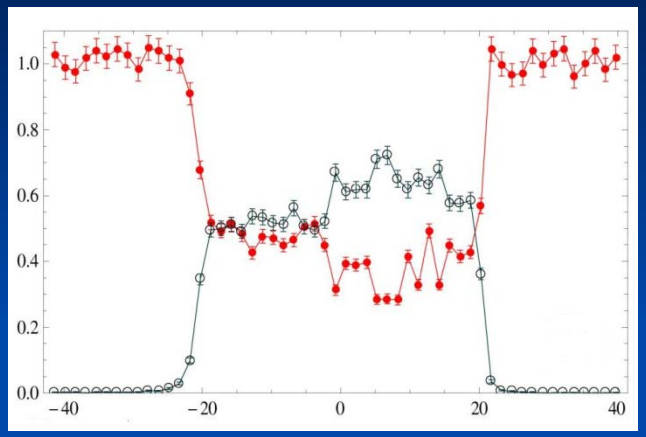

Normalized counts

Angle of incidence (arcsec)

z=1.25 mm

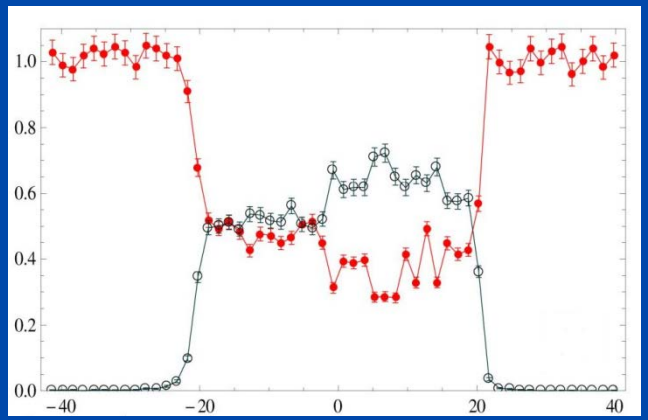

Normalized counts

Angle of incidence (arcsec)

Diffraction efficiency averaged 58%

Passband is determined by the curvature

Discussion

- The FWHM of the angular distribution is always of the order of crystal bending (45 arcsec) throughout the whole crystal depth.
- Diffraction efficiency was 58% and kept constant as a function of coordinate z.
- Although this figure of merit is far lower than the theoretically predicted 93%, this is still a good performance. Efficiency drops probably due to non-perfect crystalline quality of base material.

Possible configuration for a Laue lens

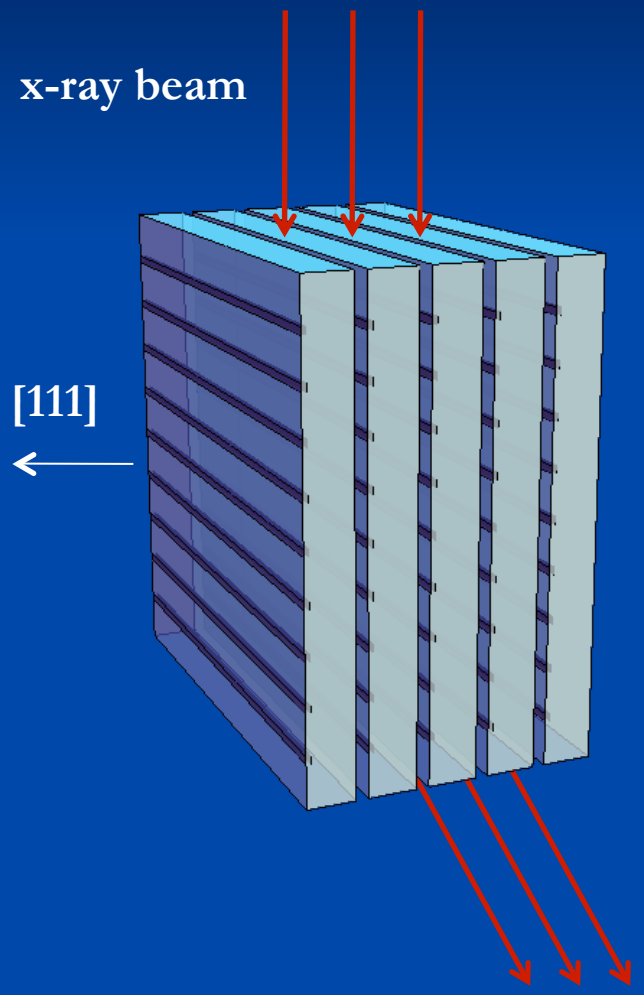

- Grooved crystals can be piled up onto the lens to form a multi-crystal, i.e., a stack with the diffracting planes parallel to the major surfaces of the crystal.
- Proper welding of neighboring plates would be realized to ensure a good alignment of the grooved plates.

V. Bellucci et al. Exp. Astron. 31 (2011) 45–58
See also poster presentation P20 by R. Camattari

Experimental results on Si stack at ILL

The stack was tested through x-ray diffraction at the ILL (Grenoble) by using a hard x-ray diffractometer based on the method of x-ray focusing for transmission (Laue) geometry (in collaboration with Michael Jentschel and Pierre Bastie). A polycromatic beam with energy in the range 80-450 keV was used.

Analyzed at different y

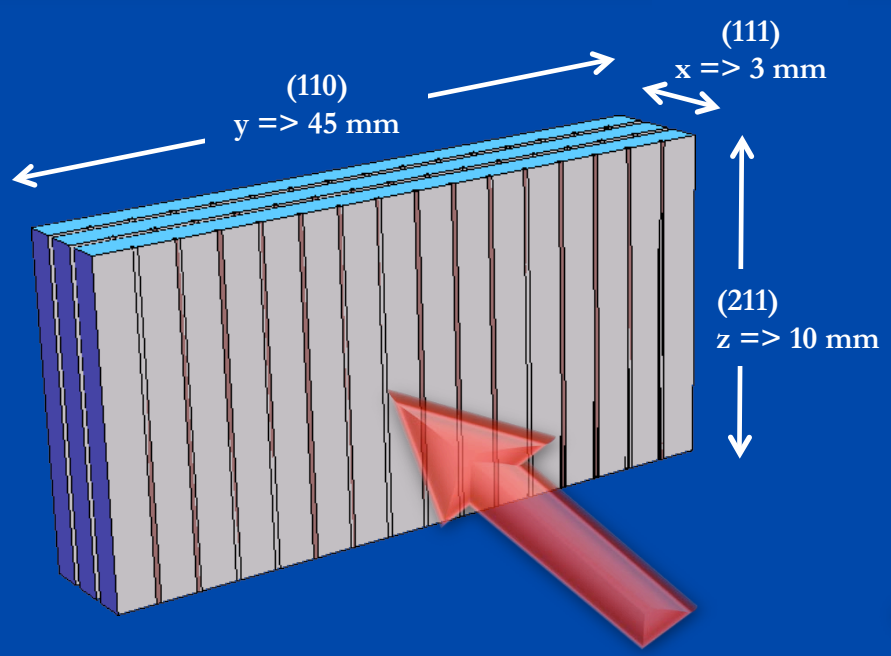

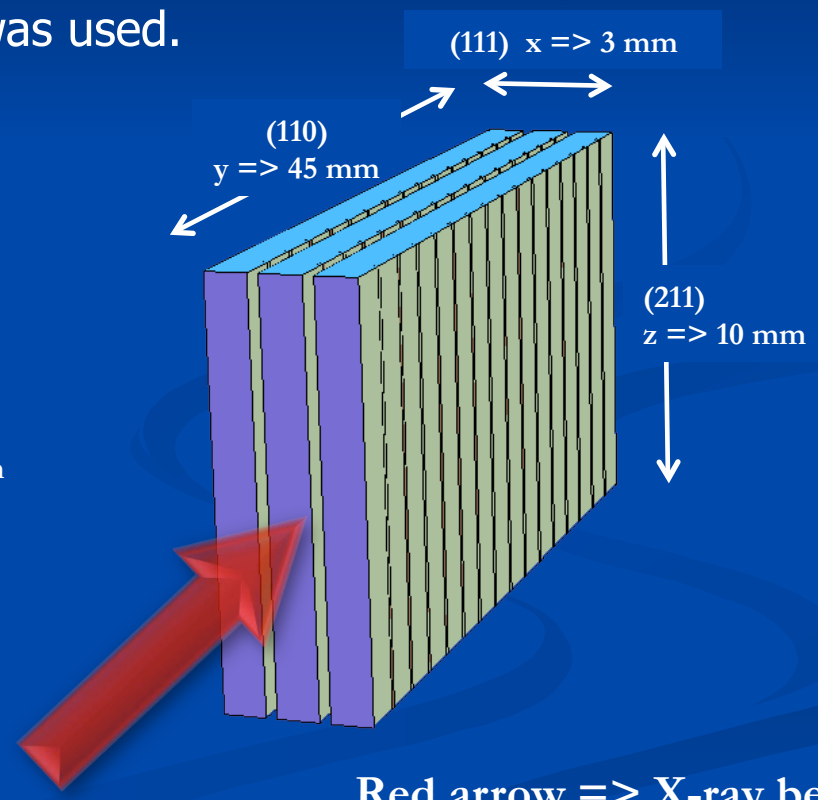

Red arrow => X-ray beam

Beam set quasi-parallel to the (220) planes

Beam size: 10 x 1 mm^2

Possible misalignments of neighbouring plates

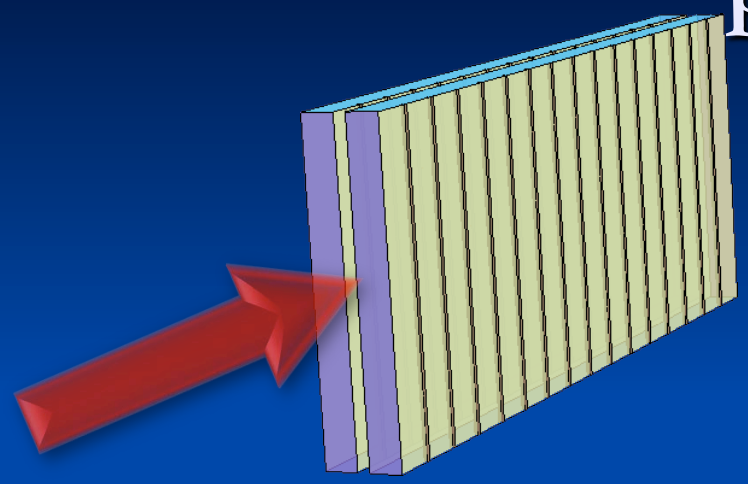

1) No misalignment

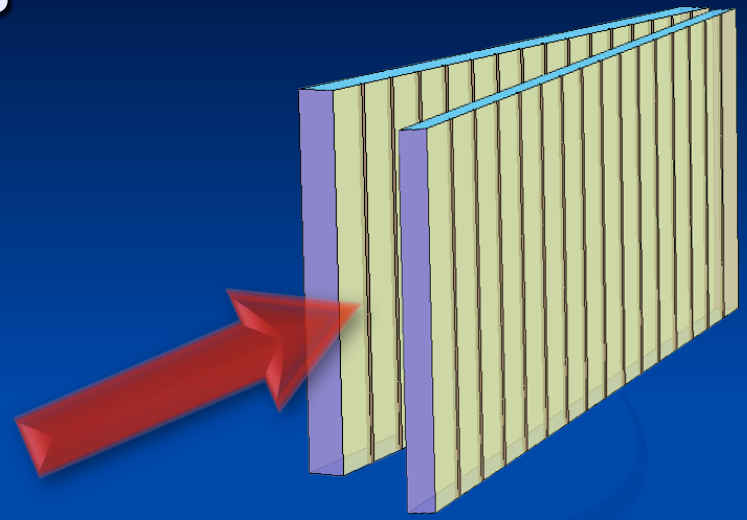

2) Critical misalignment

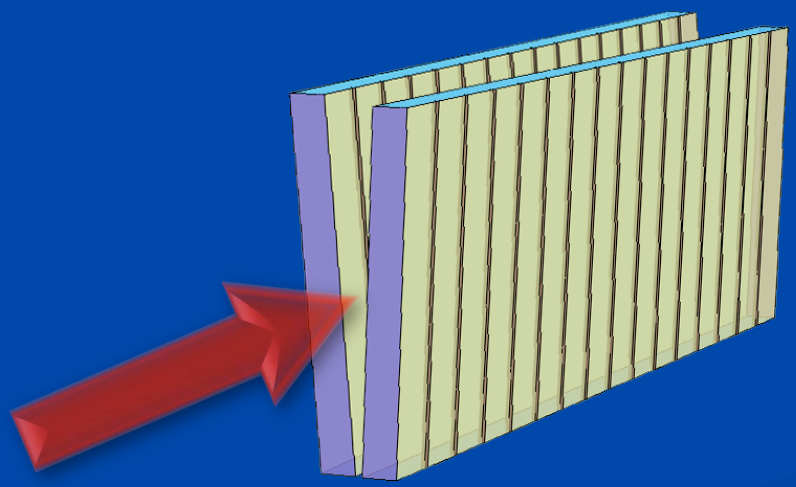

3) Less important misalignment

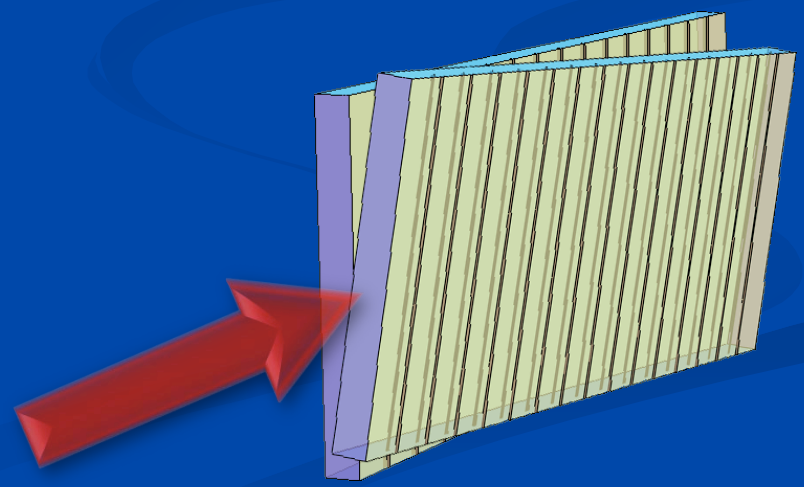

4) Indifferent misalignment

X-ray diffraction with the beam quasi-parallel to the (220) planes

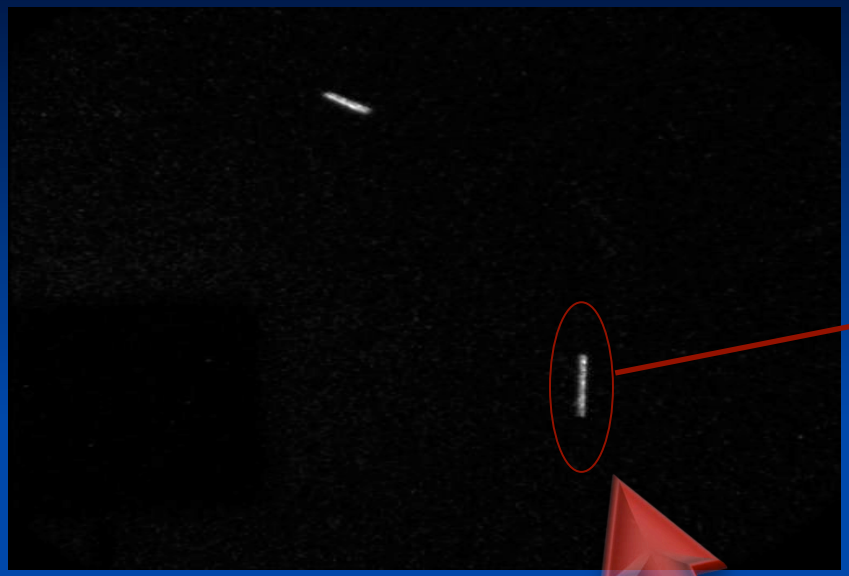

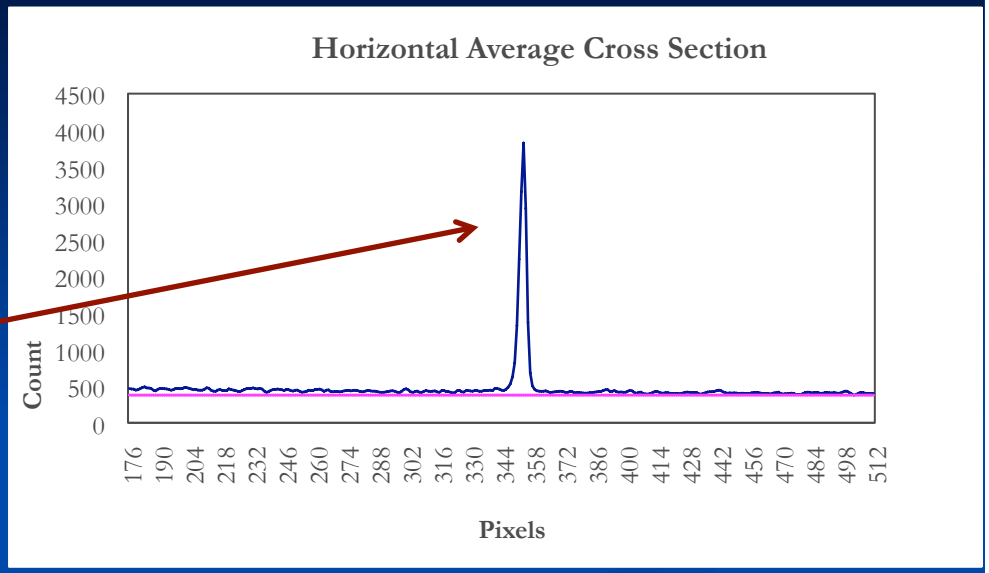

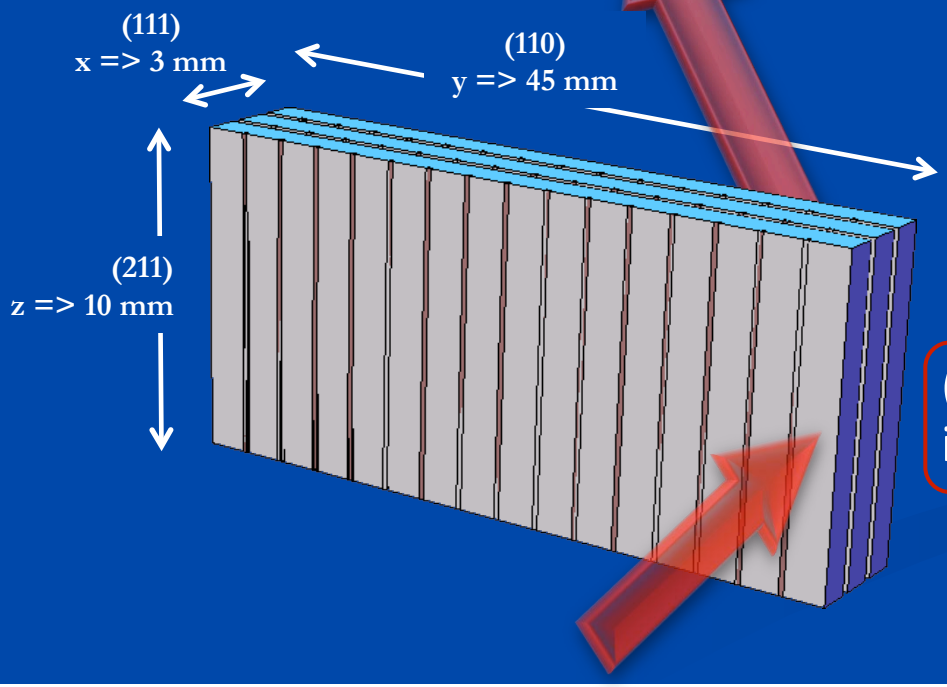

y = 0 mm (edge of the multi-crystal)

(220) planes are coplanar, thus critical and indifferent misalignments can be excluded

X-ray analysis in the middle of the multi-crystal

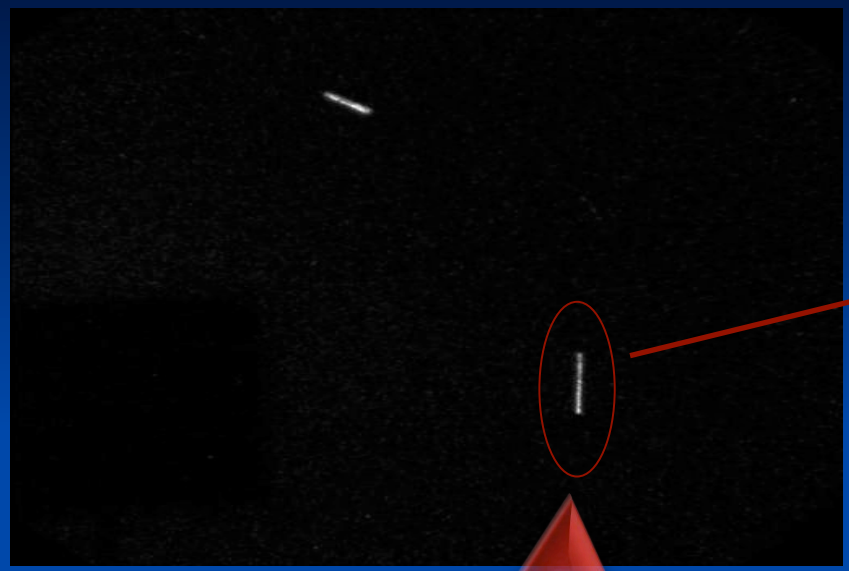

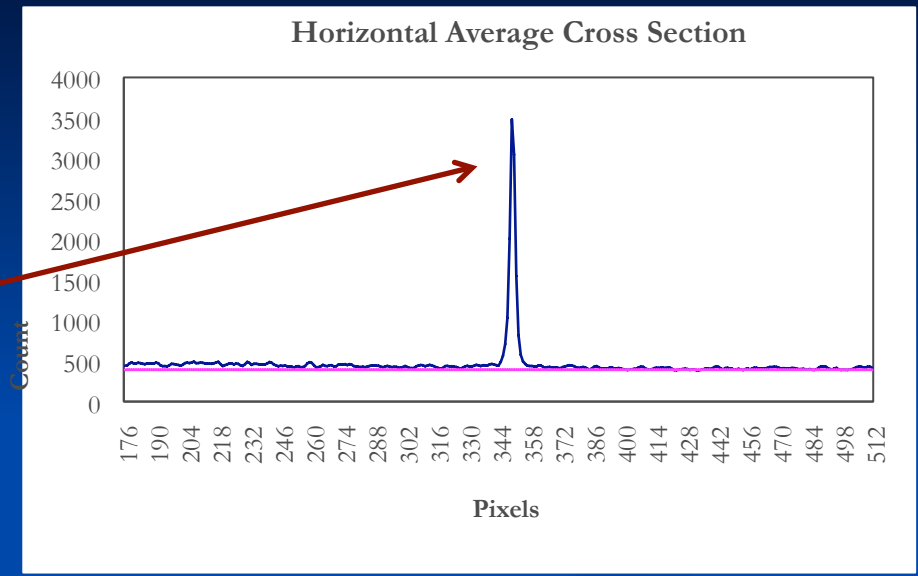

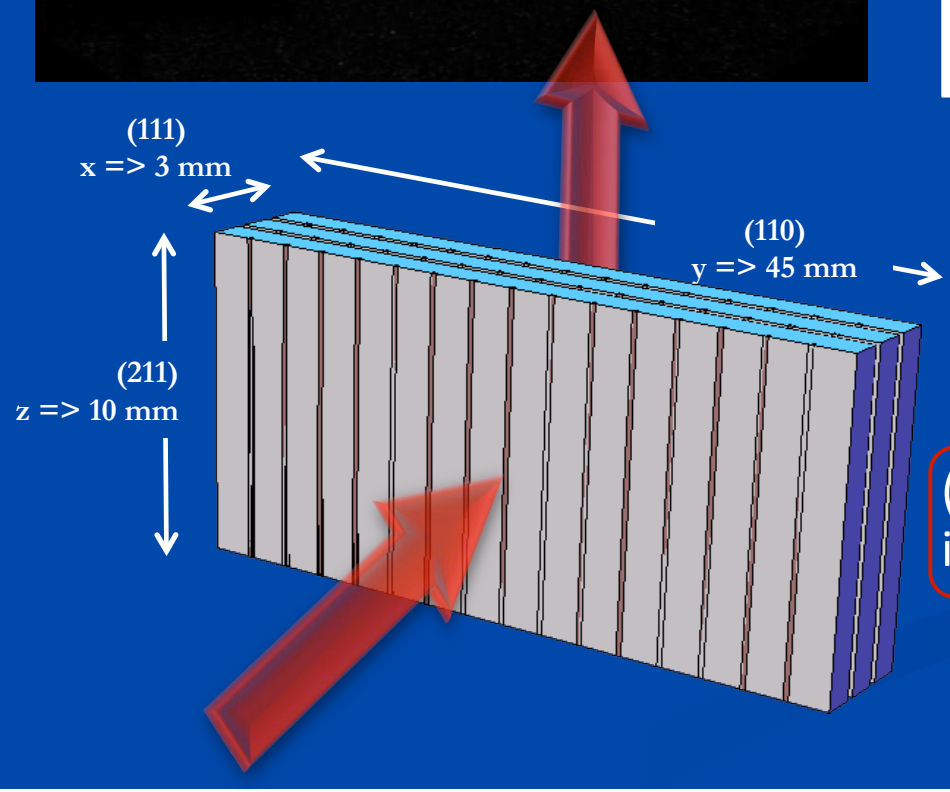

y = 21 mm

(220) planes are coplanar, thus critical and indifferent misalignments can be excluded

Misalignment of 220 planes starting at 6 mm from the edge

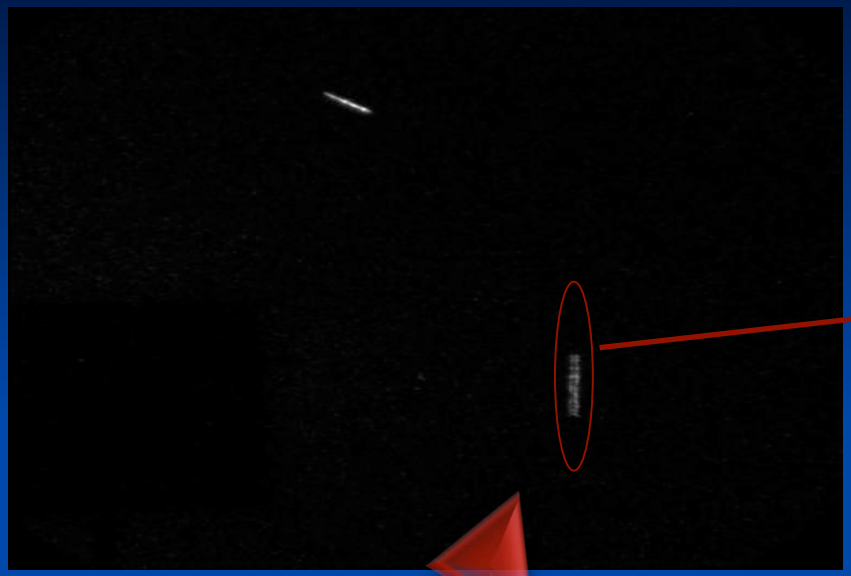

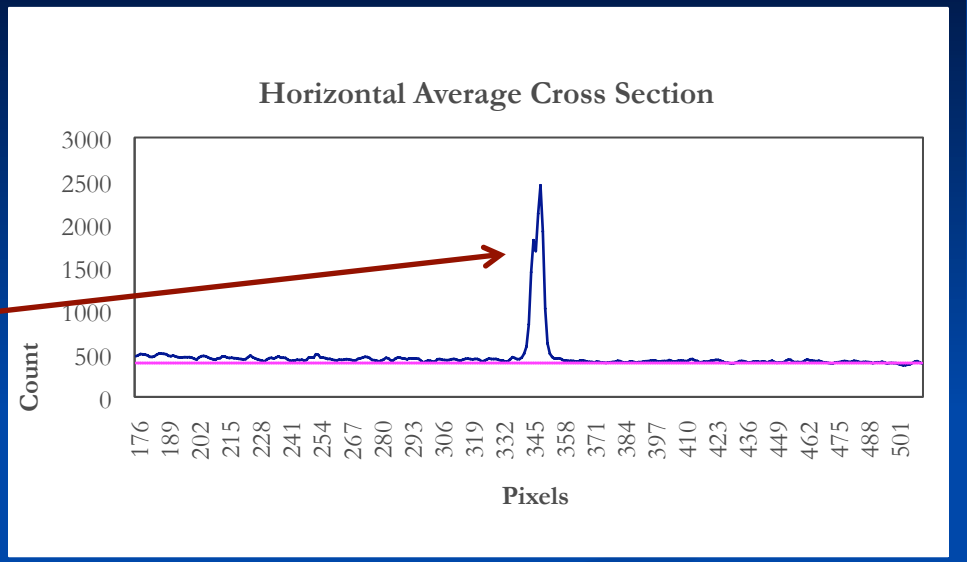

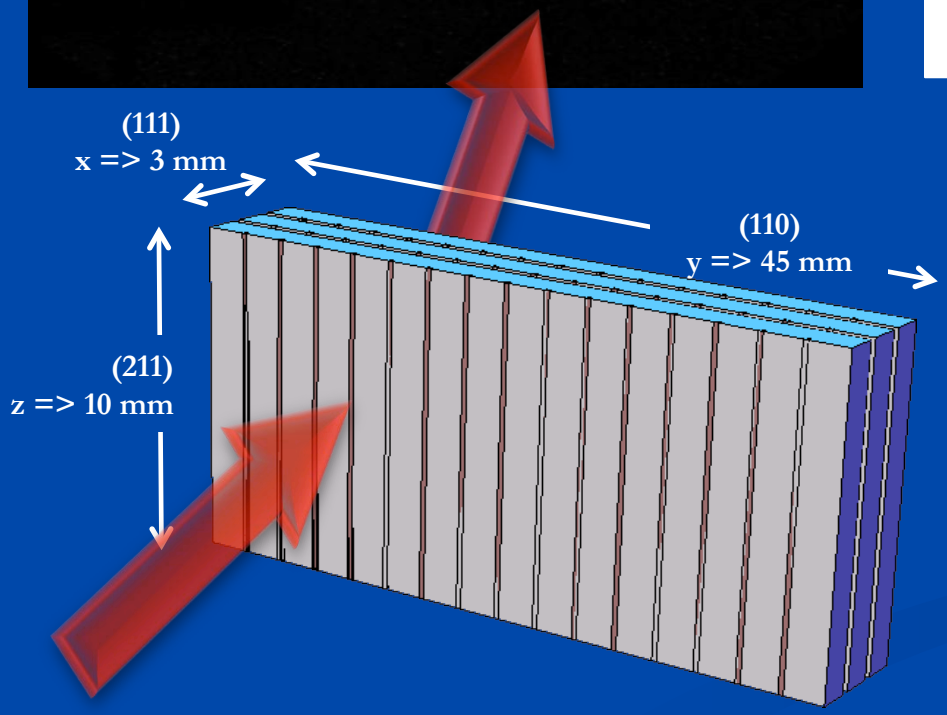

y = 38mm

Better welding of neighbouring plates must be done near the multi-crystal edge

Misalignment of (220) planes

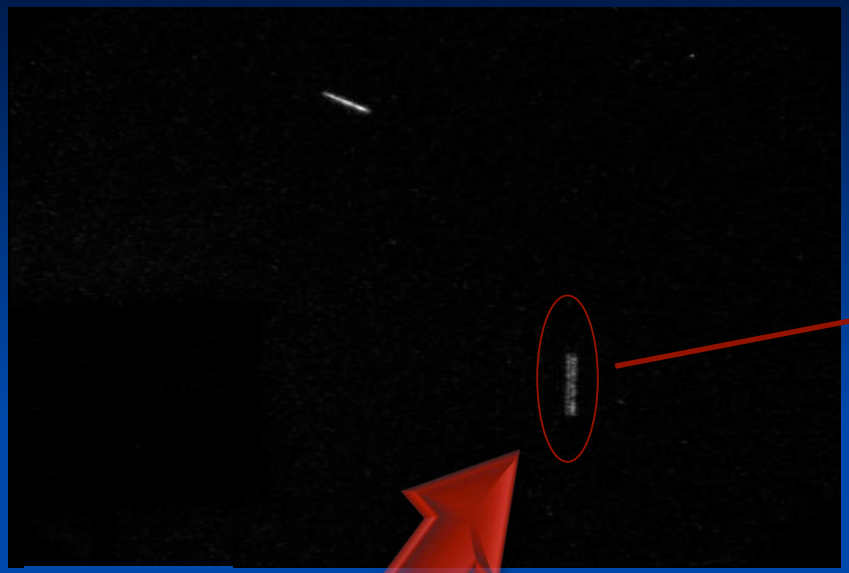

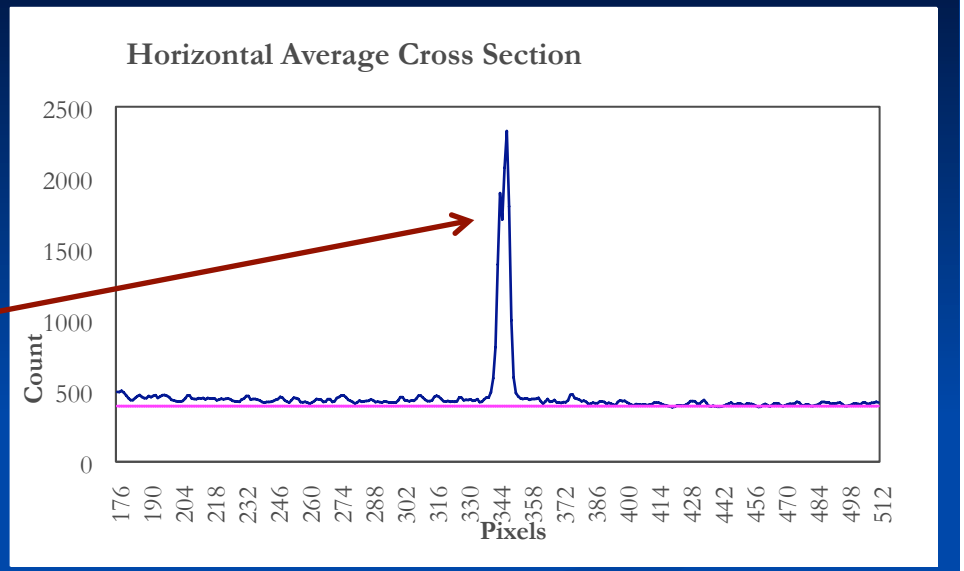

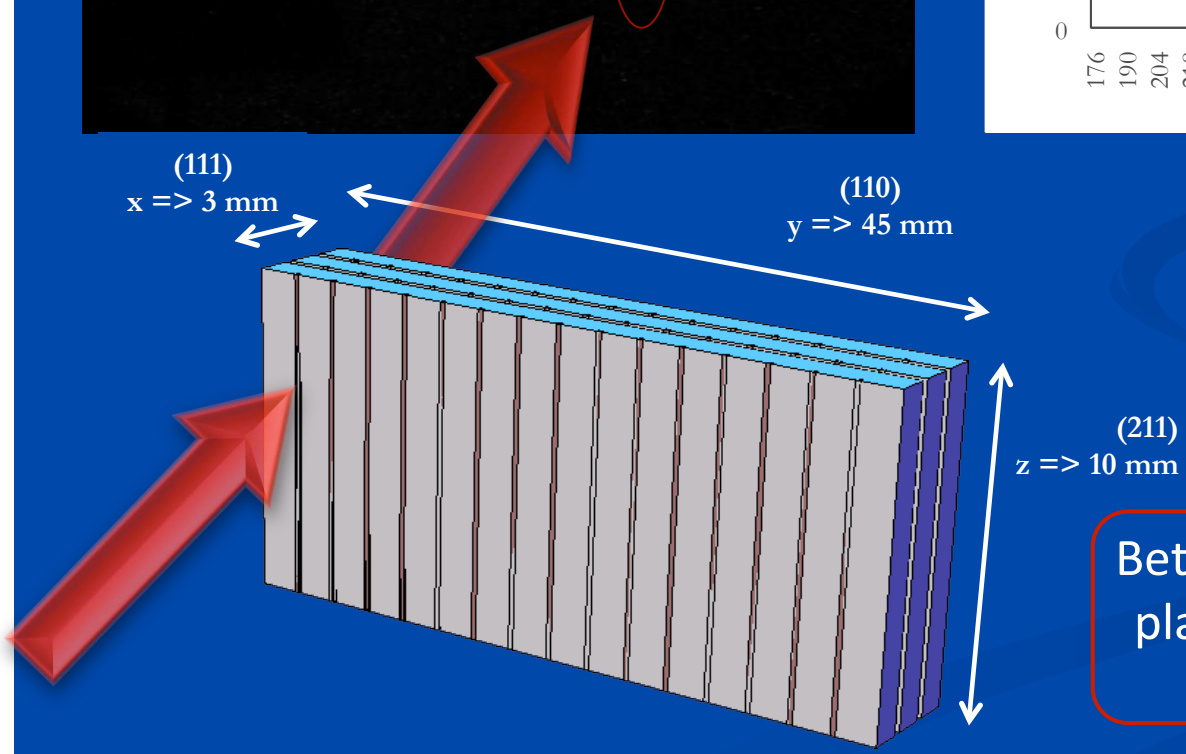

y = 42mm

Better welding of neighbouring plates must be done near the multi-crystal edge

X-ray diffraction with the beam quasi-parallel to the (111) planes

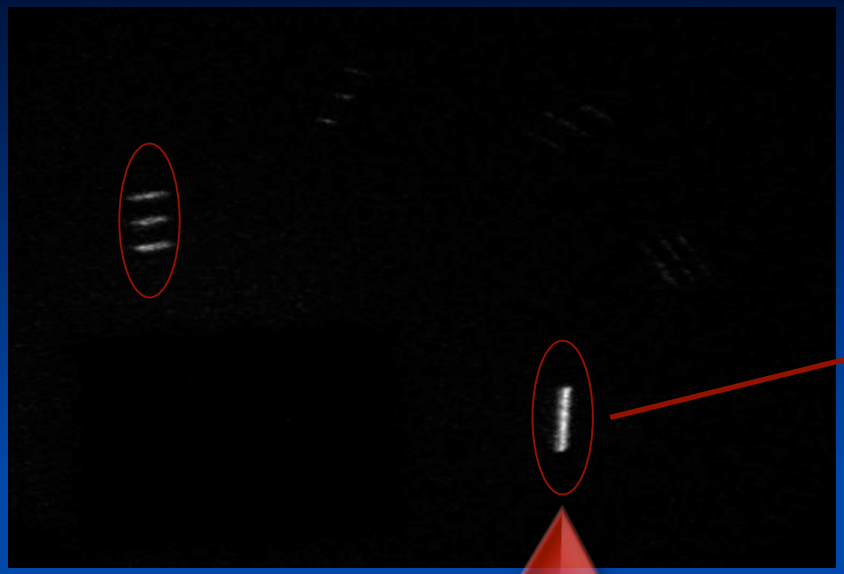

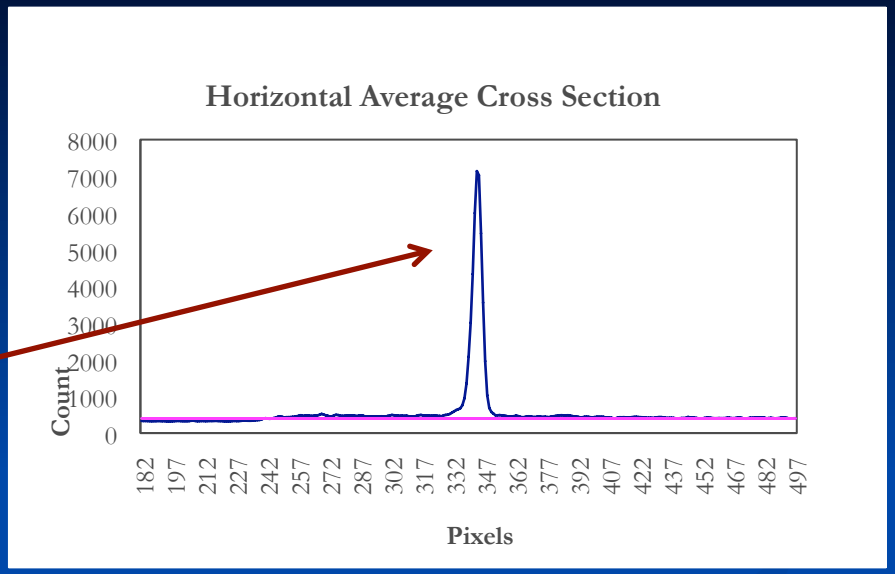

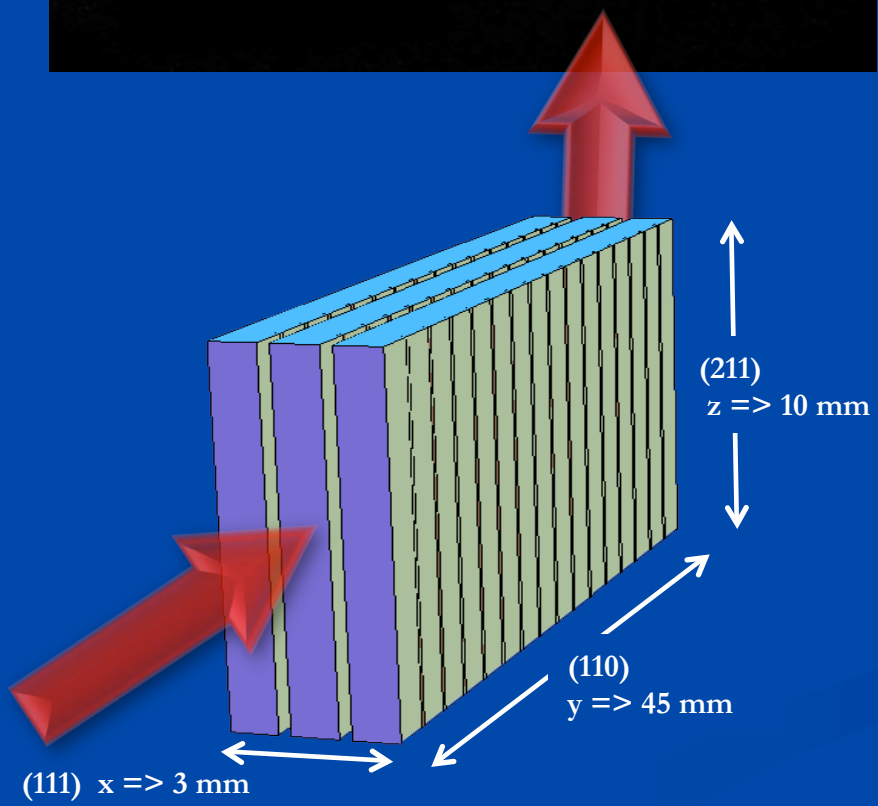

- Slit width: 10x10 mm^2
- The beam impinges on the whole volume of the multi-crystal

Alignment of (111) crystalline planes but misalignment of (211) planes.

→ Critical misalignment is excluded

Configuration with focusing

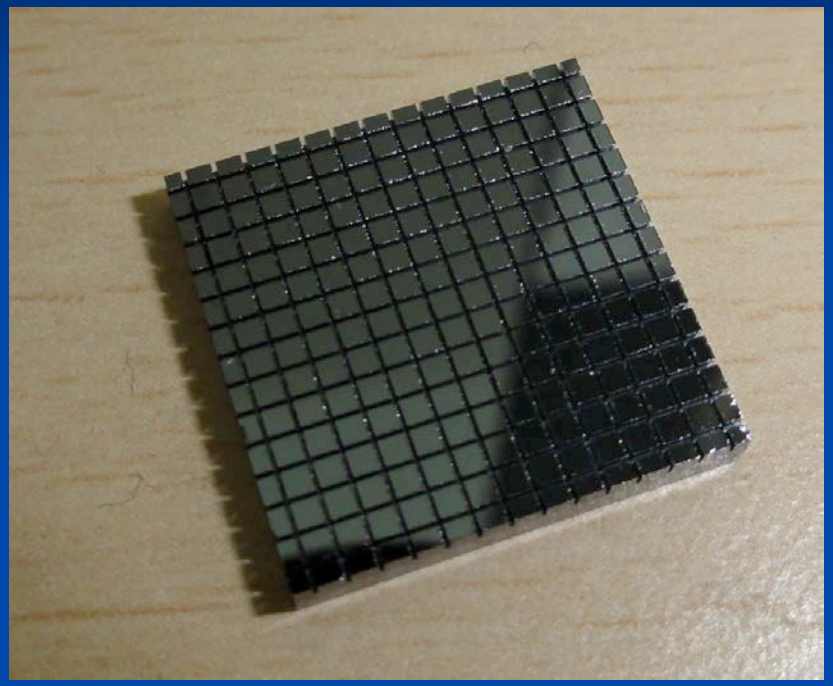

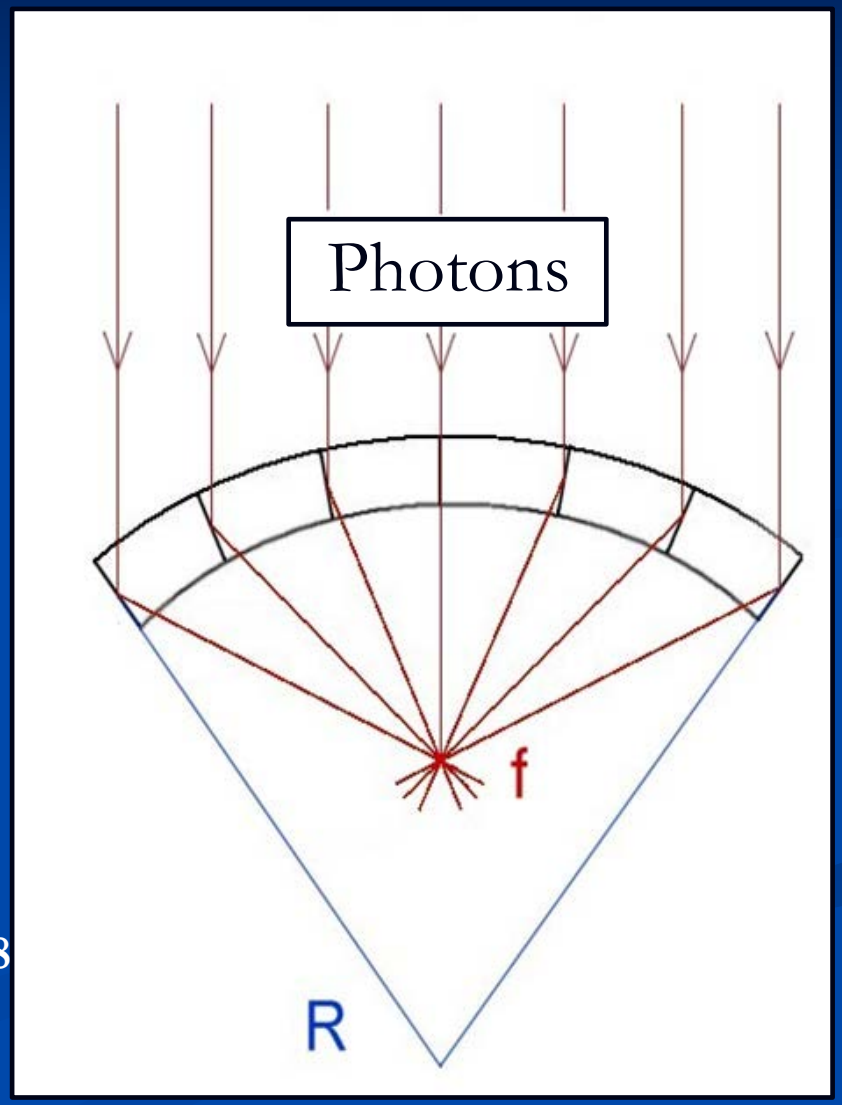

V. Guidi et al. J. Appl. Cryst. 44 (2011) 1255-1258

Quasi-Mosaic crystals for high-resolution focusing of hard x-rays

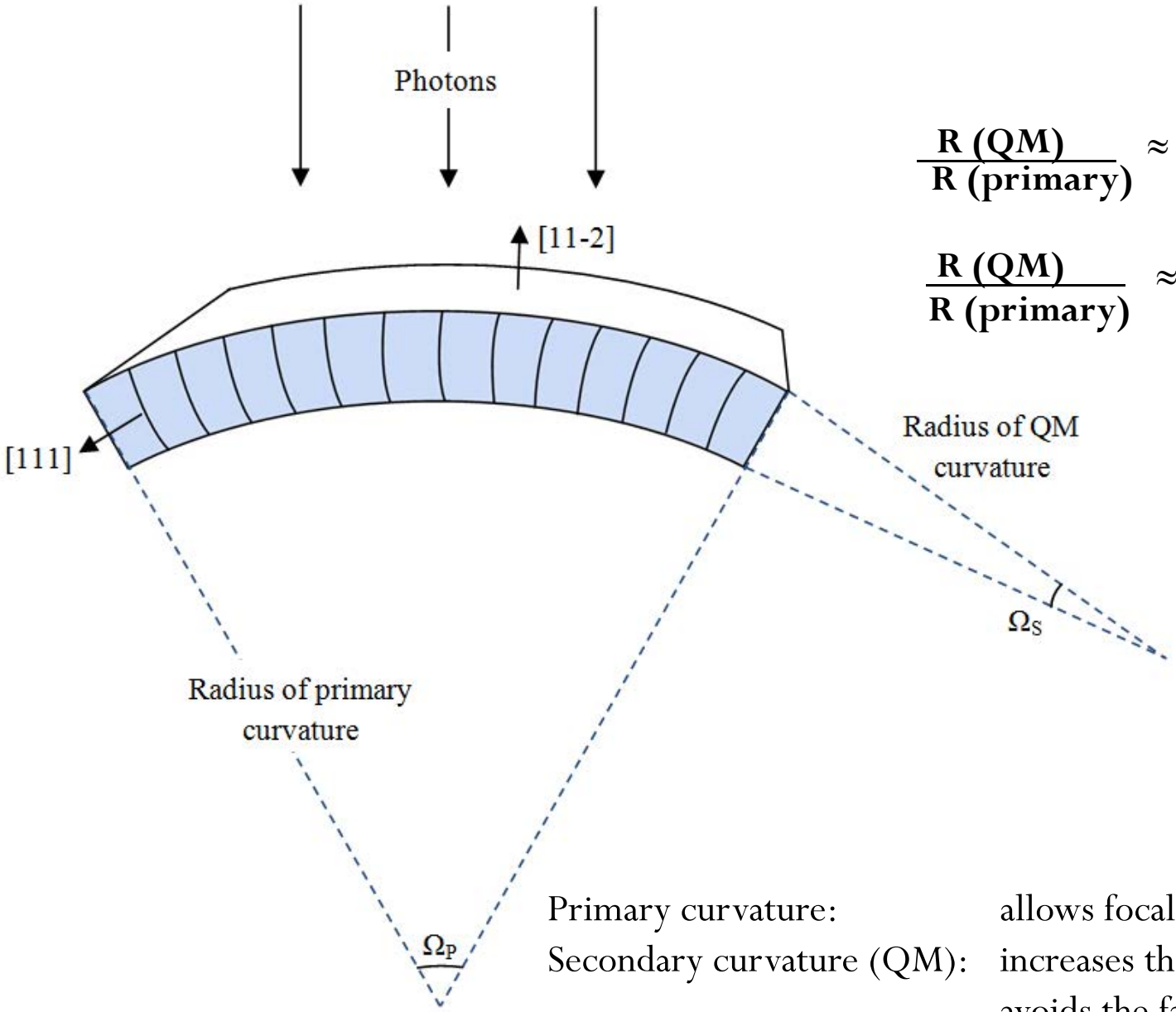

$$\frac{R\ (QM)}{R\ (primary)} \approx 2.4 \text{ for Ge}$$

$$\frac{R\ (QM)}{R\ (primary)} \approx 2.6 \text{ for Si}$$

Primary curvature:	allows focalization
Secondary curvature (QM):	increases the energy pass-band
	avoids the factor 1/2

Laue lens – Quasi Mosaic Crystals

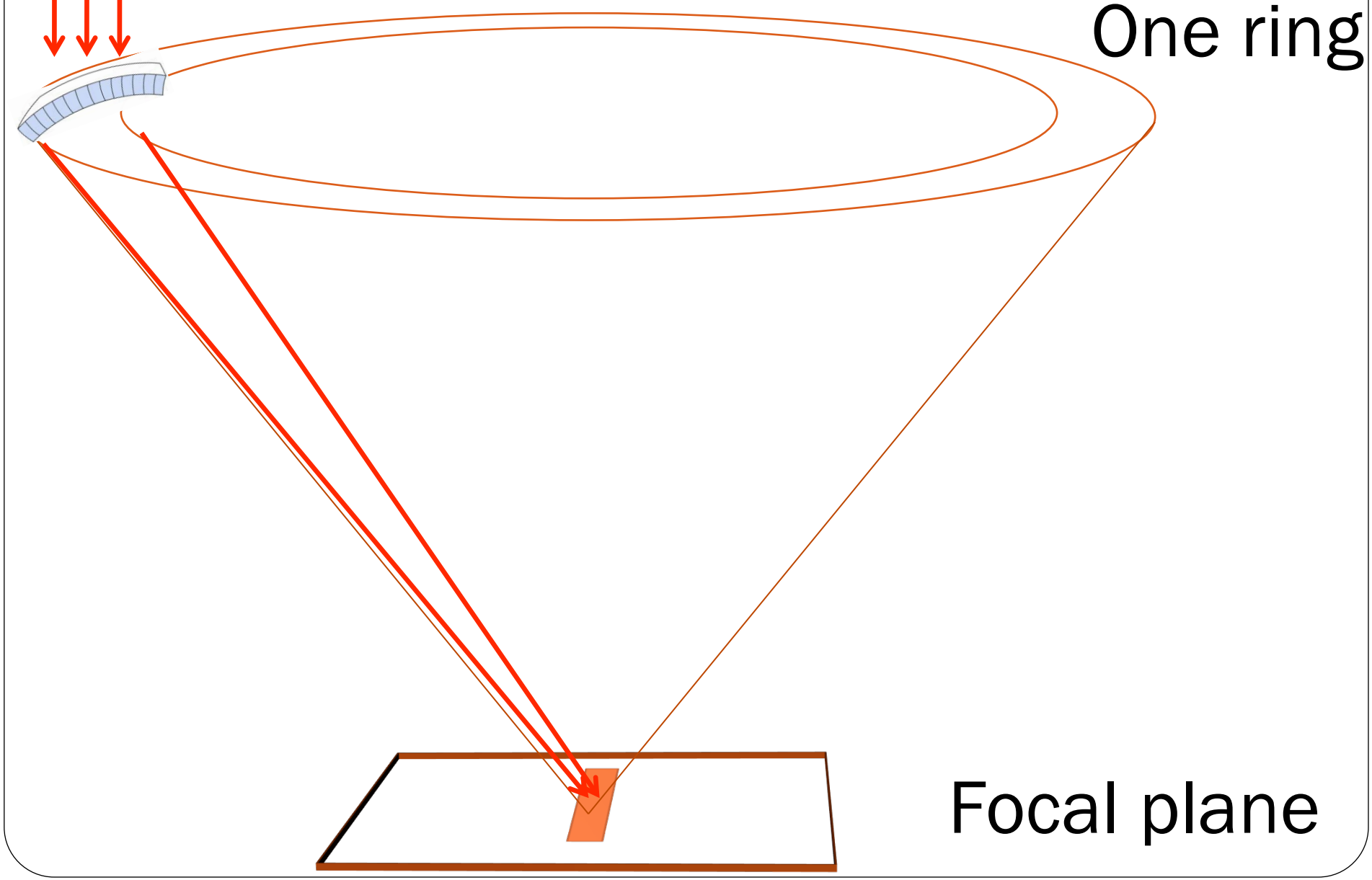

Laue lens – Quasi Mosaic Crystals

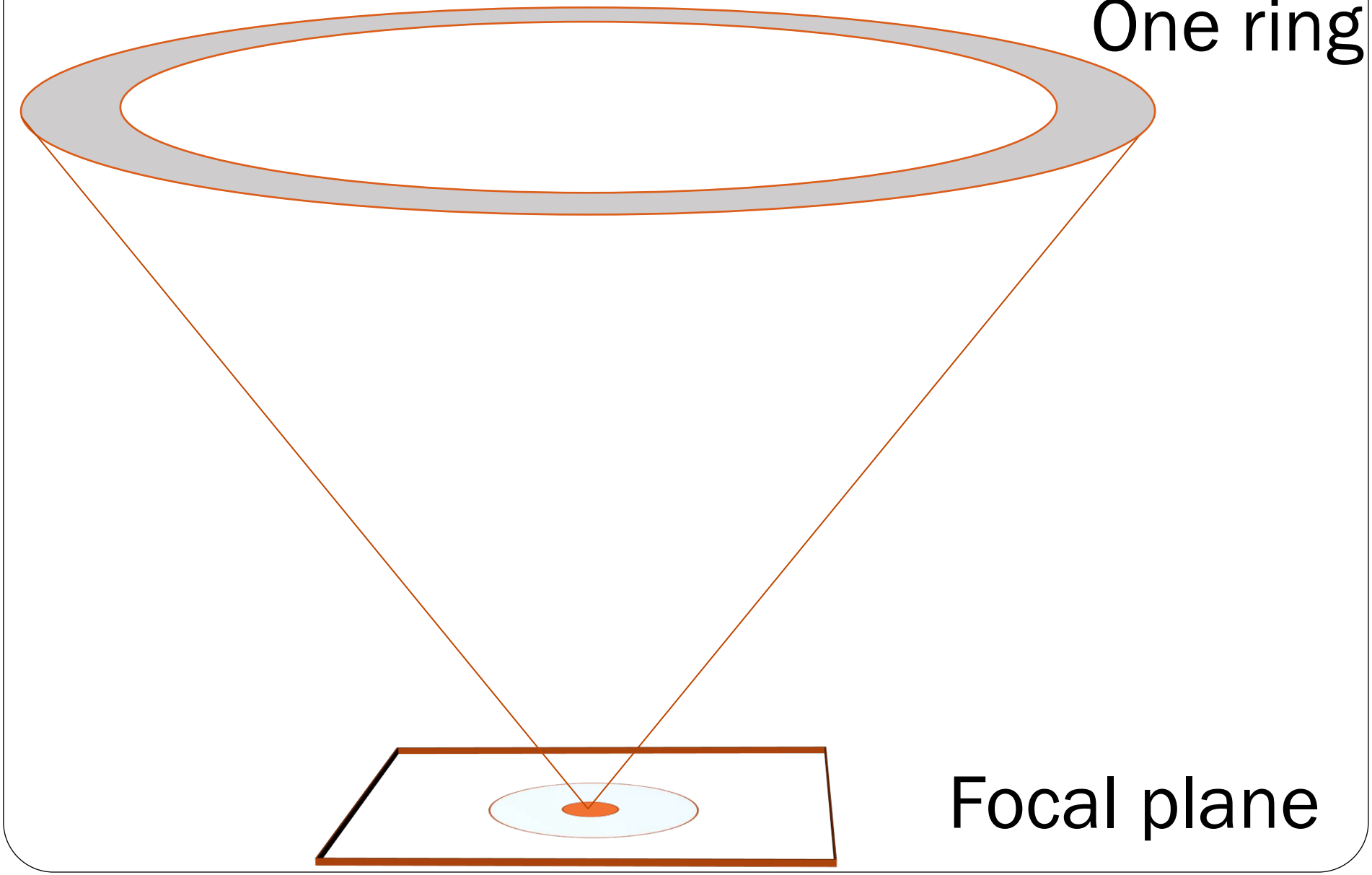

Photons distribution on the focal plane – QM case

Counts normalized to the mosaic case

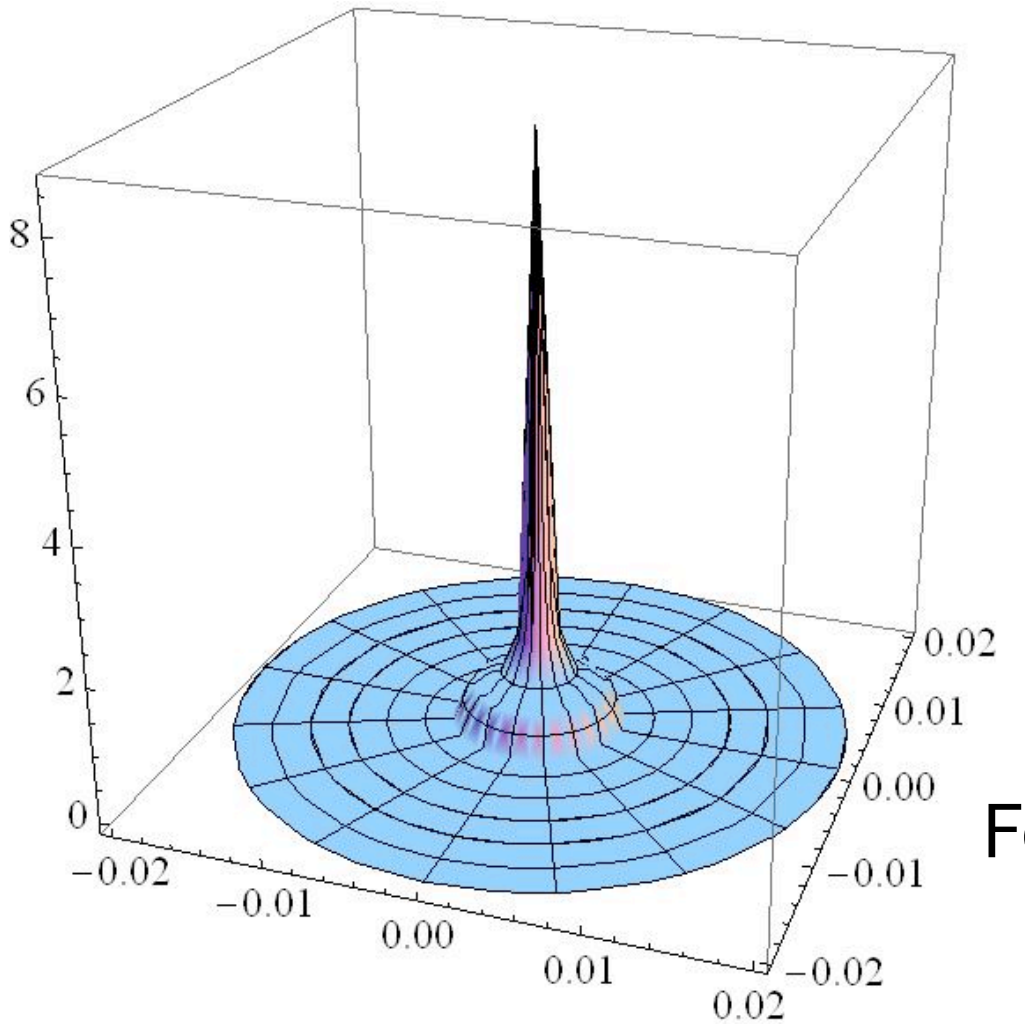

Focal plane (meter)

Conclusions

- The technique of grooves proved to yield self-standing homogeneous and controlled curvature in Si and Ge crystals.
- Crystals have shown significantly high efficiency and broad-band response when subject to x-ray diffraction.
- Energy bandwidth of bent crystals can be very well controlled by proper curvature to the sample.
- Cylindrically deformed crystals due to grooves can be piled up to form a stack (configuration parallel to the photon direction).
- Quasi-mosaicity can be used for focusing of hard x-rays through a Laue lens (configuration perpendicular to the photon direction).

Thank you for
your attention